Mitutoyo

MF/MF-U SERIES

MEASURING MICROSCOPES

OPTICAL MEASURING

PRE1431

Mitutoyo

Measuring microscopes
MF Series/MF-U Series

Expectations for measuring microscopes

A measuring microscope serves the purpose of performing both measurement and observation. It allows for the inspection of a variety of objects including semiconductor devices, electronic and electrical components, automobile precision components, resin moldings, tools and medical products. For example, this type of microscope can be used to measure an object that is too soft for contact measurement or the diameter of a hole that is too small for a measurement probe to contact. A balance between optical performance, overall accuracy, and ease of use is an important requirement for a measuring microscope. Such device enables you to observe and measure elements that have either been invisible or difficult to see. Mitutoyo believes that expectations for measuring microscopes will continue to grow and that user friendliness, high measurement data throughput and environmental friendliness will be demanded at the same time. To play our part in supporting essential technologies in the industry, we will continue to provide high-quality, high-definition measuring microscopes, while staying true to our commitments and beliefs.

From design and development to support after delivery

Mitutoyo designs, develops and manufactures all microscope parts – including those for the body, such as lenses and optical tubes – and the highly accurate built-in digital scale. Our in-house design and development processes enable us to, proactively, offer consultation on special requirements and respond to customer requests, such as those for customized fabrication.
Mitutoyo carefully delivers the microscope from the production plant to its desired destination* and installs and adjusts it on-site. The packaging box is recyclable, which reduces waste and helps the environment. After adjustment, customers have the choice of taking advantage of a maintenance service contract or use our reliable after-sales services according to their needs. This ensures a reliable and confident use of their Mitutoyo microscope for a long time to come.

*If a dedicated delivery service is used.




CONTENTS

In pursuit of optical performance — the essence of microscopy —

These microscopes use an optical design for the optical tube and objective to reduce flare within the optical system as much as possible to enable the clear display of subtle details of inspected objects. This series renders even a clear, high-contrast observation of black resin surfaces possible. The MF-U Series is equipped with the proven FS optical system metal microscope head and displays clear images with high color reproducibility in which the three primary colors blue, red and yellow are corrected. (The plan apochromat specifications are used for the objective*.)
For the MF and MF-U Series, an LED- or halogen-based lighting system can be adopted. Higher lighting efficiency and sufficient illuminance within the optical system provide an environment for high-magnification measurement and bright-field as well as dark-field observation in which you can work efficiently without tiring out your eyes.

* Specifications according to which aberrations across the image surface and chromatic aberrations in the wave length range of the three primary colors (blue, yellow and red) are corrected.

In pursuit of measuring accuracy — close to JIS grade 0 —

(common to MF D and MF-U D)

X and Y axes: (2.2+0.02L)μm or less

Reference) Measuring accuracy of each axis of a JIS B 7153 measuring microscope (at 20°C)
Grade 0: (2+0.01L)μm or less
Grade 1: (4+0.02L)μm or less L: measuring length (mm)

Example

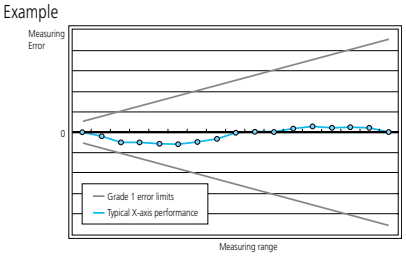

A high-level optical performance and overall measuring accuracy are essential features for a measuring microscope. The MF and MF-U Series realizes the measuring accuracy stipulated by the above standards for every stage size*.
This series is useful for any measurement because it offers both long stroke measurement and high accuracy at the same time.
*Conforms to the JIS B 7153 measurement method for the X and Y axes. The above measuring accuracy graph is an example and does not represent all main unit accuracies.

The digital scale built into the microscope is a photoelectric type transmission linear encoder with a maximum response speed of 50 m/min. This highly accurate encoder was developed in an underground laboratory where the world's best scale accuracy evaluation technique is available. Mitutoyo was the first manufacturer to acquire ISO/IEC 17025(JCSS) accreditation for calibrating line standards (standard scales up to 500 mm long) in Japan.

For safe use — traceability to national standards —

To establish and maintain the traceability of measuring tools and instruments, Mitutoyo uses length standards traceable to the national standards in Japan to calibrate the standard used to calibrate measuring tools and instruments.

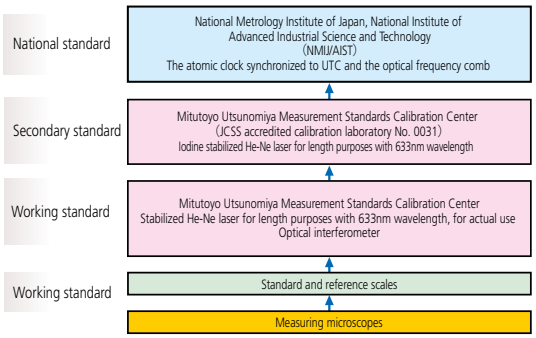

Solutions provided by measuring microscopes

Observation and inspection of small areas

By using various types of illumination, the MF Series can more precisely reproduce the colors and shapes of objects that are observed and inspected.
The MF-U Series microscopes are highly versatile instruments that offer microscope observation functions such as dark-field mode (to determine surface scratches and small steps, which are difficult to see in bright-field mode), simple polarization (to observe coloration or contrast through the polarizer or analyzer by adopting polarization properties) and differential interference (to observe small surface steps and other elements in color contrast using the polarization filter with a differential interference prism), as well as measurement functions.

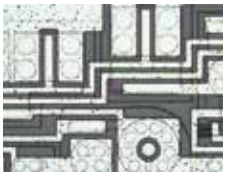
Bright-field observation


Dark-field observation


Polarized observation

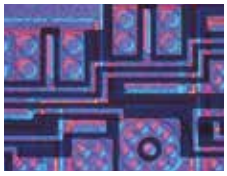
Differential interference observation

Easy image photography

Anyone can easily photograph microscope images by attaching a digital camera to the microscope. By means of a general-purpose C-mount adapter, any digital camera model that supports C-mounting can be attached. In this way, several people can simultaneously analyze and evaluate the microscope image displayed on the monitor. Also, an inspection chart attached to the image can be generated automatically.


MF-B2017D + Vision Unit

Microscope-based high-resolution measurement

It is possible to build a manual image measurement system by equipping a measuring microscope with the image measurement option (vision unit). Because the software constantly transmits stage displacements, measurements within the camera imaging range (on the screen) as well as those wider than the screen are supported. In addition, automatic edge detection provides an efficient measurement environment with a high throughput.
However, eyepiece resolution might be superior to camera resolution in some cases. For example, the surface of a molded item made of black resin might be clearer to the human eye than to the camera (monitor observation). Therefore, a measuring microscope that also enables you to see the surface and other elements is a system that has a very high added value. We recommend to connect the two-dimensional data processing unit QM-Data200 (a dedicated control unit) to the measuring microscope for such dimensional measurement.


MF-UB1010D + QM-Data 200

Measuring microscopes MF Series
Universal measuring microscopes MF-U Series

Sliding Nosepiece New design

(Factory-set option of **MF D**)

Sliding nosepiece with two objectives mounted.

An objective and LED circular illuminator mounted on the sliding nosepiece.

The MF (finite-corrected optical system) measuring microscope usually only allows a single objective to be mounted which needs to be replaced for every magnification change. The new sliding nosepiece allows two objectives to be mounted, thus making for quick magnification change. This nosepiece design also enables installation of an LED circular illumination unit. These arrangements support a quick change of magnification and versatile illumination.

The new optional sliding nosepiece vastly adds to user-friendliness. One of two objectives can quickly be moved into position to change the magnification, and it also allows the use of a circular illuminator. The free choice of mounting position for the digital display improves the operability in this series.

High-visibility digital display

New design

(common to **MF D** and **MF-U D**)

Front of display

Rear of display

The resolution can be switched to 1μm, 0.5μm or 0.1μm for the digital display (two or three axes) as a standard for all models. This grants high resolution measurement. Zero-set, direction changeover and smoothing functions also come as a standard. (Zero can be set using the switch near the X or Y handwheels.)

The low-profile display boasts large digits and allows mounting at any position appropriate for the operator's view. The customer has the choice of installation on the left or right side of the column.

Because the general-purpose RS-232C format is adopted for data transfer, data can be output to a standard printer or personal computer. It also offers the opportunity of transferring the display readings to spreadshee software.

Measuring microscopes MF Series
Universal measuring microscopes MF-U Series

Height measurement with a high focus repeatability

(Option on **MF D** / factory-set option on **MF-U D**) For details, see page 35.

Focus repeatability is important when measuring a vertical step or other element using the microscope.
In particular, measurement errors due to the depth of focus of the objective are inevitable. The MF and MF-U Series measuring microscopes have a focus pilot, which enhances focus repeatability. The focus pilot is mounted on the TV camera port section in the main unit as an add-on unit and enables focusing position detection with high accuracy and repeatability. This realizes higher repeatability than a visual check and decreases variation in measured values caused by human error.
Two types of focus patterns are available, either of which can be selected according to the size of the part to be focused on or the surface state, material or other properties of the inspected object. A clear, bright, high-intensity LED (green or red) is employed as the light source. The focus pattern, for which brightness can be steplessly adjusted and checked on the eyepiece or TV monitor. This substantially improves measurement throughput.

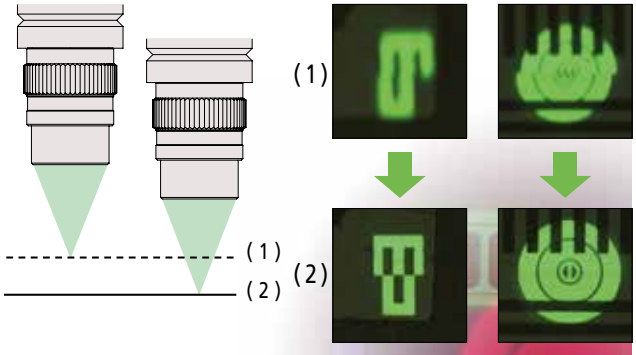

Wide-field observation

(Common to **MF D** and **MF-U D**)

The best-in-class eyepiece field number* of 24mm (for WF10X) offers a wide viewing field that helps prevent affecting your eyes or causing fatigue in long observation or measurement sessions. The WF10X eyepiece features wider diopter adjustment ranges on the left and right sides than previous products.

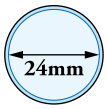

MF

* Width of an inspected object that can be seen across the whole viewing field when a 1X objective is used

LED and halogen light options for transmitted and reflected illumination

(options common and essential to **MF D/MF-U D**)

Transmitted LED illumination unit (common to MF/MF-U Series) | Reflected LED illumination unit (for MF Series) | Reflected LED illumination unit (for MF-U Series)

An LED or halogen light can be selected for the coaxial illumination in the main unit. While the conventional halogen light can be used for observation and measurement, the LED light can also be selected if you want to reduce the time lost to replace a failed halogen bulb with a new one and need high intensity illumination that quickly responds to brightness adjustment.
The LED light has a long working life*1 and won't fail all of a sudden.
In addition, the visibility, brightness and coloration are constant because, unlike fluorescent tubes, the LED light is free from glare and changes in color temperature. This means less eye fatigue after extended observation. Because the LED consumes little power and radiates little heat, measurement is economical and produces less heat-induced effects on inspected objects*2. In addition, this light source is impact resistant and does not contain environmental toxins.
All the models in the MF and MF-U Series have transmitted and reflected illumination aperture-diaphragms as standard to enable observation and measurement with less light diffraction.

*1: The working life will be shorter if the maximum illuminance is always used.
*2: The LED light for MF/MF-U Series incorporates a quiet cooling fan to further reduce heat effects.


LED illumination


Halogen illumination

Quick-release mechanism*1 and zero-set switch incorporated*2 (Common to **MF D** and **MF-U D**)

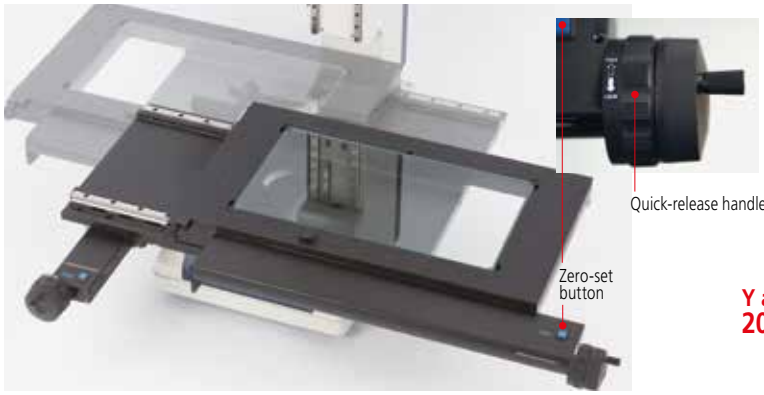

The stage movement can be switched between extremely coarse and fine (FREE and LOCK) by using the quick release knobs on the X and Y handles. These handles are useful for freeing the stage when the distance to the measurement position is long or you want to quickly return to a reference position.
Because this mechanism uses the twist-roller method, switching causes little impact and enables smooth movement. Because the display zero-set switches are located near the handles*2, you can focus on the eyepiece during measurement and keep your hand near the handle almost all the time except when adjusting the focus.

*1: Patent registered in Japan
*2: The zero-set buttons are located on the X and Y axes, not the Z axis.

Stage variations including long stroke (common to **MF D** and **MF-U D**)

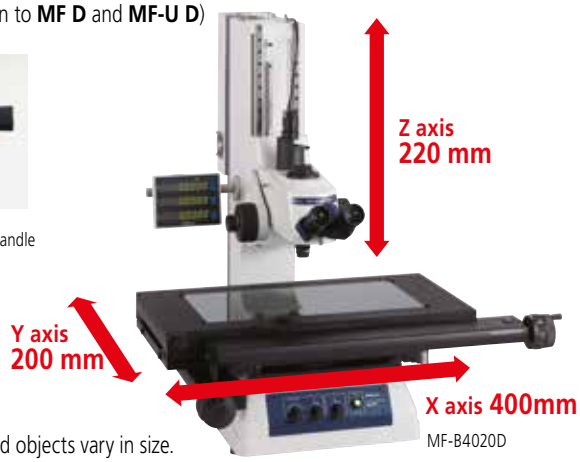

MF-B4020D

Inspected objects vary in size.
Widely used in every industry branch, this series provides many measurement stroke variations.
It offers a stage for long stroke measurement of 400×200×220 mm in X, Y and Z. This is useful when measuring printed circuit boards, shafts, knife tools and other objects. Although the standard model has a Z-axis range of 220 mm, the Z axis can be extended with a column upgrade.
A swivel rotation mechanism* is also provided as standard. This mechanism is useful when fixing an inspected object in parallel with the table movement direction.

*Only for models with a Y-axis range of 170 mm or longer

Z-Axis handles provided on both sides of standard model (**MF D** and **MF-U D**)

Because the Z axis handles are placed on both sides of the column in standard models, the user can easily operate one of them regardless of left- or right-handedness. The digital display can also be installed on either side of the column to set up an environment suited to the user's dominant hand.
Ergonomics have also been taken into consideration, and the handle is located in a position where a user of shorter stature can comfortably turn it.

Tilting optical tube of standard model (**MF-U D**)

The eye point adjustability to a position suitable for the user's stature guarantee comfortable observation. The column can be fixed in any angle between 0° and 30°. Plus, the reticle is replaced in the twinkle of an eye.

Highly rigid column base (Common to **MF D** and **MF-U D**)

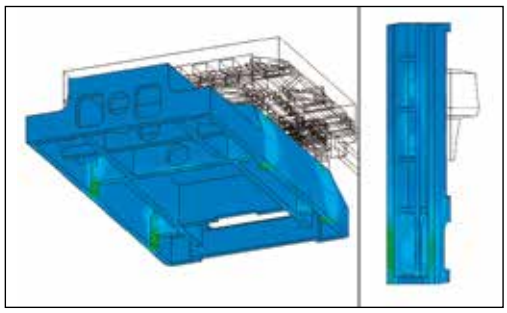


Column

The base that supports the column holding the optical tube and the rest of the microscope must be absolutely rigid to enable observation and measurement using any amount of magnification.
This series has been repeatedly evaluated regarding various aspects including a drop test*, transportation test*, and smoothing test and provides steady vision and consistent accuracy over the entire stroke.
To enhance rigidity, horizontal ribs have been added within the column. The power supply section is located outside the base to reduce heat effects for higher base rigidity and highly accurate measurement.

*Proprietary Mitutoyo tests executed using appropriate procedures.

Measuring microscopes
MF Series

MF-B1010D
The binocular tube (eyepiece) and illumination unit are optional accessories.

MF-B2010D
The binocular tube (eyepiece) and illumination unit are optional accessories.

MF-B2017D
The binocular tube (eyepiece) and illumination unit are optional accessories.

Features

- Observation with a clear and flare-less erect image and a wide field of view
- Highest measuring accuracy in its class (conforms to JIS B 7153)
- ML series, high-NA objectives that are specially designed for the MF series (long working distance type)
- Illumination unit (reflected/transmitted) selectable from a high-intensity LED or halogen bulb (required)
- Variable aperture diaphragm (reflected/transmitted) allows observation measurement while suppressing light diffraction
- Variety of standardized stages in sizes up to 400×200 mm
- Quick-release mechanism useful for moving the stage quickly when measuring workpieces that are large in size or quantity
- Coarse/fine feed handles equipped as standard on both sides allow precise focus and observation measurement regardless of left-/right-handedness
- High-magnification eyepiece observation up to 2000X
- Standard measuring microscope that has a wide variety of optional accessories including a Vision Unit and various digital CCD cameras
- Low-noise design

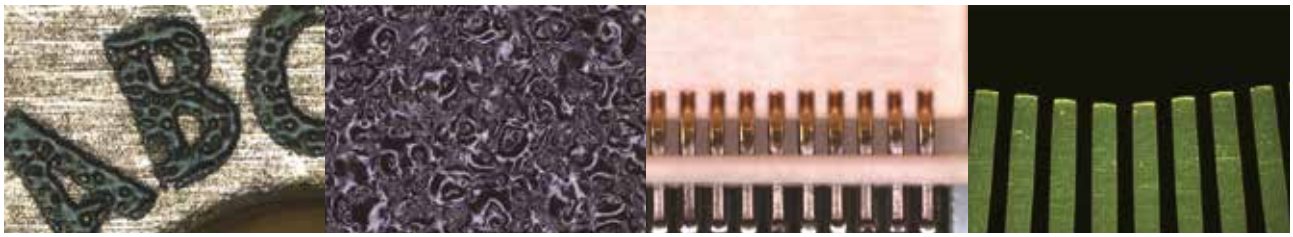

MF-B3017D
The binocular tube (eyepiece) and illumination unit are optional accessories.

MF-B4020D
The binocular tube (eyepiece) and illumination unit are optional accessories.

Specifications

Without Z-axis scale	**Model No.**	**MF-A1010D**	**MF-A2010D**	**MF-A2017D**	**MF-A3017D**	**MF-A4020D**
	Order No.	**176-861-10***	**176-862-10***	**176-863-10***	**176-864-10***	**176-865-10***
With Z-axis scale	**Model No.**	**MF-B1010D**	**MF-B2010D**	**MF-B2017D**	**MF-B3017D**	**MF-B4020D**
	Order No.	**176-866-10***	**176-867-10***	**176-868-10***	**176-869-10***	**176-870-10***
Optical tube (eyepiece(s) required)		Monocular or binocular (angle of column: 25°) Standard TV camera port for all models, reticle (broken cross-hair, line width: 5μm), optical path switching (observation/TV camera = 50/50)				
Observation image		Erect image				
Observation method		Bright-field observation				
Eyepiece (optional) Adjustable diopter		10X (eyepiece field number: 24), 15X, 20X Note: Monocular - one 10X eyepiece provided as standard; Binocular - two 10X eyepieces provided as standard				
Objective (optional)		ML objective 3X (provided as standard), 1X, 5X, 10X, 20X, 50X, 100X				
Z axis	Max. workpiece height	150mm		220mm		
	Feed mechanism	Coaxial coarse and fine feed, handles on both sides (coarse: 30mm/rotation, fine: 0.2mm/rotation)				
Illumination unit		LED or halogen is required.				
Illumination filter		One GIF filter is provided as standard (and mountable for both transmitted and reflected illumination)				
Stage	Measurement range	100×100mm	200×100mm	200×170mm	300×170mm	400×200mm
	Tabletop size	280×280mm	350×280mm	410×342mm	510×342mm	610×342mm
	Effective stage glass size	180×180mm	250×150mm	270×240mm	370×240mm	440×240mm
	Swiveling angle	—		±5° (left)		±3° (left)
	Maximum table loading	10kg		20kg		15kg
	Quick-release mechanism	Provided as standard for the X and Y axes				
	Zero-set button	Provided as standard for the X and Y axes (and for the Z axis only for the MF-B type)				
Measurement system		High-accuracy digital scale				
Measuring accuracy*1 (X and Y axes, when not loaded)		(2.2+0.02L)μm, L: measuring length(mm)				
Digital display	Minimum reading	1/0.5/0.1μm switchable				
	Display axes	X and Y (or X, Y, and Z only for the MF-B type)				
	Functions	Zero-setting, direction switching, RS232C output, USB output (specific to QSPAK)				
Main unit dimensions (WxDxH)		562×730×667mm	624×745×667mm	632×892×782mm	682×892×782mm	757×907×782mm
Main unit mass		67kg	71kg	148kg	156kg	162kg
Control unit dimensions and mass		114 W×360 D×96 H mm LED: 3.5kg/Halogen: 4kg				
Maximum power consumption (with the illumination unit)		LED: 45W Halogen bulb: 160W				

Replacement halogen bulb (reflected/transmitted)	Standard: **513667** (12V/50W)
	Long life: **12BAB345** (12V/50W)

*1: Measured in conformance with JIS B 7153

Universal measuring microscopes
MF-U Series

MF-UB1010D
Turret, objectives and illumination unit are optional accessories.

MF-UB2010D
Turret, objectives and illumination unit are optional accessories.

MF-UB2017D
Turret, objectives and illumination unit are optional accessories.

Features

- Observation with a clear and flare-less erect image and a wide field of view
- Highest measuring accuracy in its class (and conforms to JIS B 7153)
- Proven M Plan Apo/BD Plan Apo/G Plan Apo series, high-NA objectives from the FS optical system (long working distance type)
- Integration of metallurgical and measurement microscope functions provides a high-resolution observation and high-accuracy measurement solution
- Illumination unit (reflected/transmitted) selectable from a high-intensity LED or halogen bulb (required)
  * Only the halogen light source for transmitted illumination is provided as standard accessory. A seperate light source for transmitted illumination must be ordered additionally as an option.
- Variable aperture diaphragm (reflected/transmitted) allows observation measurement while suppressing light diffraction
- Variety of standardized stages in sizes up to 400×200 mm
- Quick-release mechanism useful for moving the stage quickly when measuring workpieces that are large in size or quantity
- Coarse/fine feed handles equipped as standard on both sides allow precise focus and observation measurement regardless of left-/right-handedness
- High-magnification eyepiece observation up to 4000X (when using M Plan Apo SL200X)
- Standard measuring microscope that has a wide variety of optional accessories including a Vision Unit and various digital CCD cameras
- Low-noise design

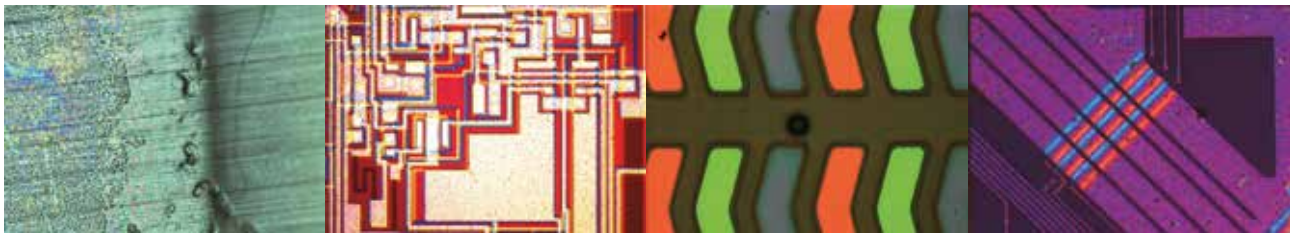

MF-UB3017D
Turret, objectives and illumination unit are optional accessories.

MF-UB4020D
Turret, objectives and illumination unit are optional accessories.

Specifications

BF (bright-field)	Without Z-axis scale	**Model No.**	**MF-UA1010D**	**MF-UA2010D**	**MF-UA2017D**	**MF-UA3017D**	**MF-UA4020D**
		Order No.	**176-871-10***	**176-872-10***	**176-873-10***	**176-874-10***	**176-875-10***
	With Z-axis scale	**Model No.**	**MF-UB1010D**	**MF-UB2010D**	**MF-UB2017D**	**MF-UB3017D**	**MF-UB4020D**
		Order No.	**176-876-10***	**176-877-10***	**176-878-10***	**176-879-10***	**176-880-10***
BD (bright-field/dark-field)	Without Z-axis scale	**Model No.**	**MF-UC1010D**	**MF-UC2010D**	**MF-UC2017D**	**MF-UC3017D**	**MF-UC4020D**
		Order No.	**176-881-10***	**176-882-10***	**176-883-10***	**176-884-10***	**176-885-10***
	With Z-axis scale	**Model No.**	**MF-UD1010D**	**MF-UD2010D**	**MF-UD2017D**	**MF-UD3017D**	**MF-UD4020D**
		Order No.	**176-886-10***	**176-887-10***	**176-888-10***	**176-889-10***	**176-890-10***
Optical tube			Tilting trinocular tube (angle of column: 0 to 30°), Siedentoph type (pupil distance adjustment: 51 to 76mm), built-in 1X tube lens, reticle (broken cross-hair, line width: 5µm), optical path switching (observation/TV camera = 50/50)				
Observation image			Erect image				
Observation method			BF, DF (only for MF-UC and UD types), simple polarization, differential interference				
Eyepiece (optional) Adjustable diopter			10X (eyepiece field number: 24, two eyepieces provided as standard), 15X, 20X				
Turret (required)	Bright-field (BF)		Adjustable manual turret or adjustable power turret (Select one.)				
	Bright-field/dark-field (BD)		Adjustable manual turret or adjustable power turret (Select one.)				
Objective (optional)	Bright-field (BF)		All lenses including the M Plan Apo, M Plan Apo SL, and G Plan Apo series				
	Bright-field/dark-field (BD)		All lenses including the BD Plan Apo and BD plan Apo L series				
Z axis	Max. workpiece height		150mm		220mm		
	Feed mechanism		Coaxial coarse and fine feed, handles on both sides (coarse: 10mm/rotation, fine: 0.1mm/rotation)				
Illumination unit			LED or halogen is required.				
Illumination filter			One GIF filter is provided as standard (and mountable for both transmitted and reflected illumination)				
Stage	Measuring range		100×100mm	200×100mm	200×170mm	300×170mm	400×200mm
	Tabletop size		280×280mm	350×280mm	410×342mm	510×342mm	610×342mm
	Effective stage glass size		180×180mm	250×150mm	270×240mm	370×240mm	440×240mm
	Swiveling angle		—		±5° (left)		±3° (left)
	Maximum table loading		10kg		20kg		15kg
	Quick-release mechanism		Provided as standard for the X and Y axes				
	Zero-set button		Provided as standard for the X and Y axes (and for the Z axis only for the MF-UB and -UD types)				
Measurement system			High-accuracy digital scale				
Measuring accuracy*1 (X and Y axes, when not loaded)			(2.2+0.02L)µm, L: measuring length(mm)				
Digital display	Minimum reading		1/0.5/0.1µm switchable				
	Display axes		X and Y (or X, Y, and Z only for the MF-UB and -UD types)				
	Functions		Zero-setting, direction switching, RS232C output, USB output (specific to QSPAK)				
Main unit dimensions (WxDxH)			562x730x667mm	624x745x667mm	632x892x782mm	682x892x782mm	757x907x782mm
Main unit mass			67kg	71kg	148kg	156kg	162kg
Control unit dimensions and mass			114 W ×360 D ×96 H mm LED/Halogen:3.5kg				
Maximum power consumption (with the illumination unit)			LED: 55W Halogen bulb: 90W*2				

*1: Measured in conformance with JIS B 7153 *2: The value only in a transmitted illumination

Replacement halogen bulb (transmitted)	Standard: **513667** (12V/50W)
	Long life: **12BAB345** (12V/50W)

Replacement halogen bulb (reflected) (separate light source)	For details, see p.30.

Measuring microscopes
MF Series

Dimensions

The LED illumination unit is shown on the drawings below.
The control unit is placed on the side of the microscope or directly attached to the rear of the column
The cable for connecting the control unit and microscope main unit measures 600 mm in length.

MF D

Unit: mm

MF-B1010D

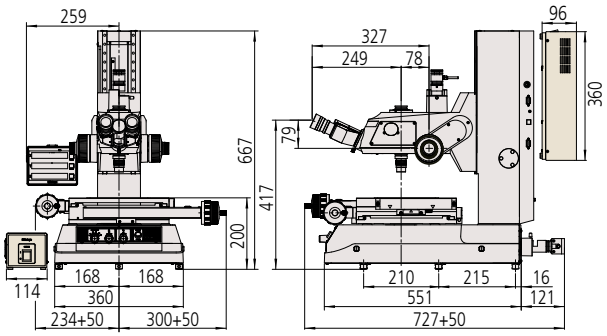

MF-B2010D

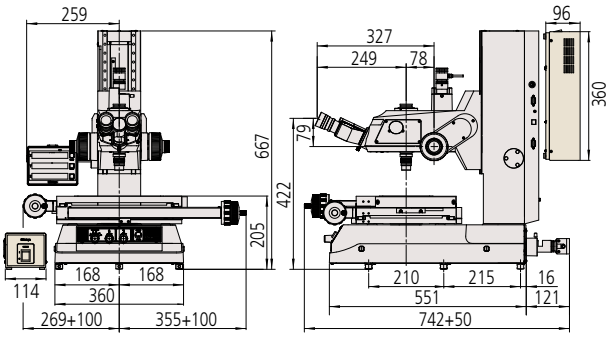

MF-B2017D

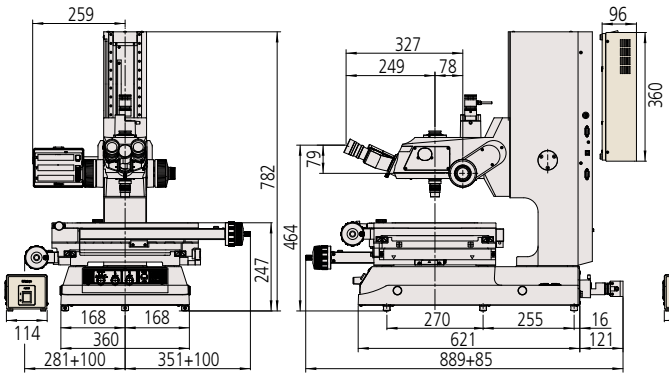

MF-B3017D

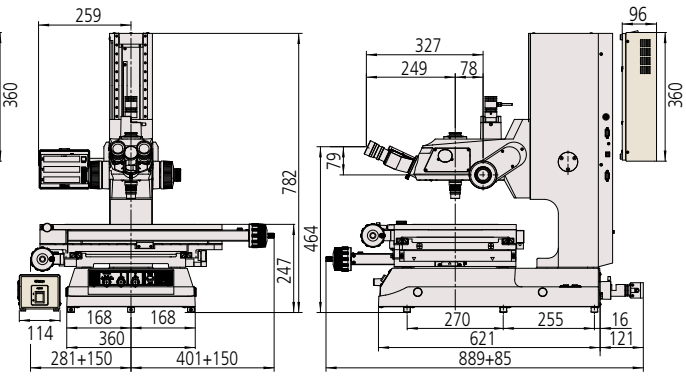

MF-B4020D

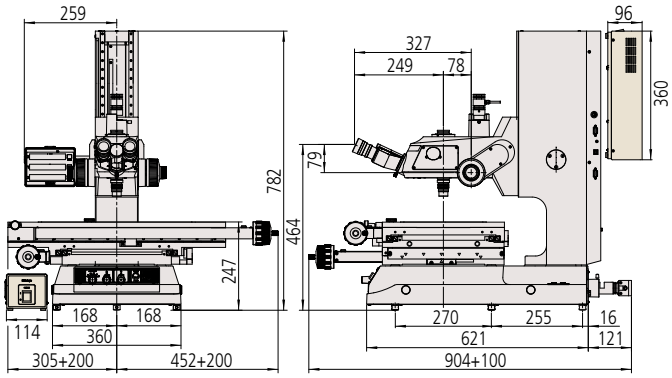

Universal measuring microscopes
MF-U Series

Dimensions

The LED illumination unit is shown on the drawings below.
The control unit is placed on the side of the microscope or directly attached to the rear of the column
The cable for connecting the control unit and microscope main unit measures 600 mm in length.

MF-U D

Unit: mm

MF-UB1010D

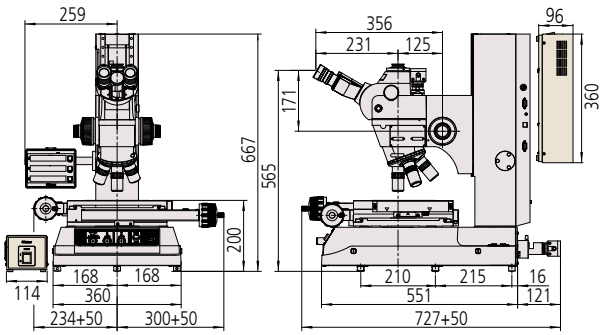

MF-UB2010D

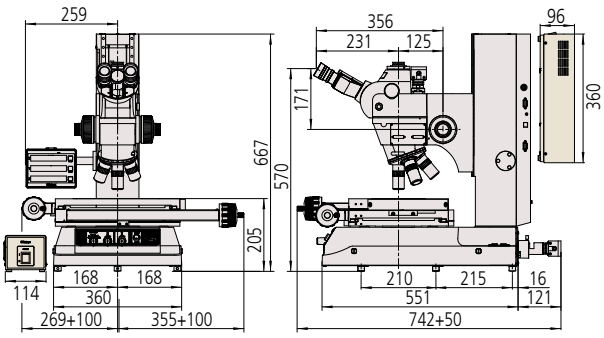

MF-UB2017D

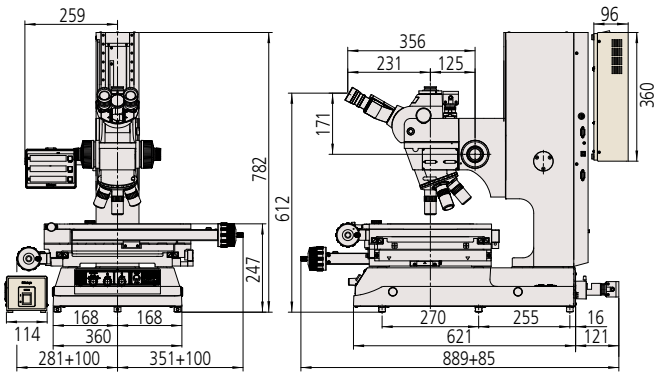

MF-UB3017D

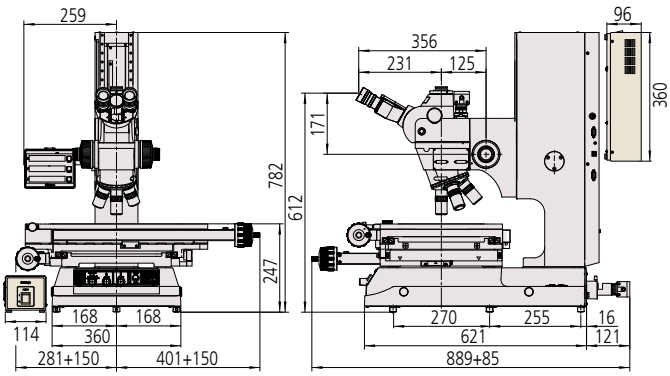

MF-UB4020D

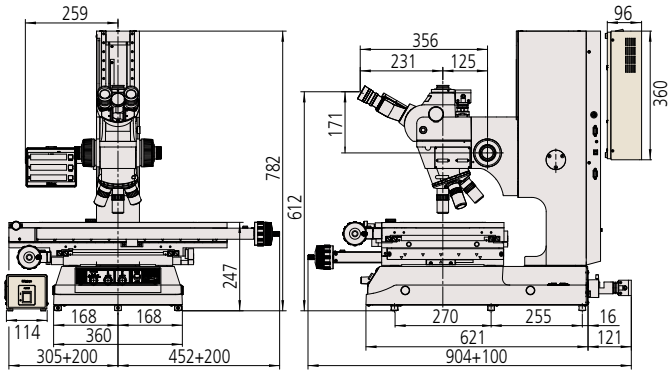

Measuring microscopes **MF Series**

Optional accessories

System diagrams

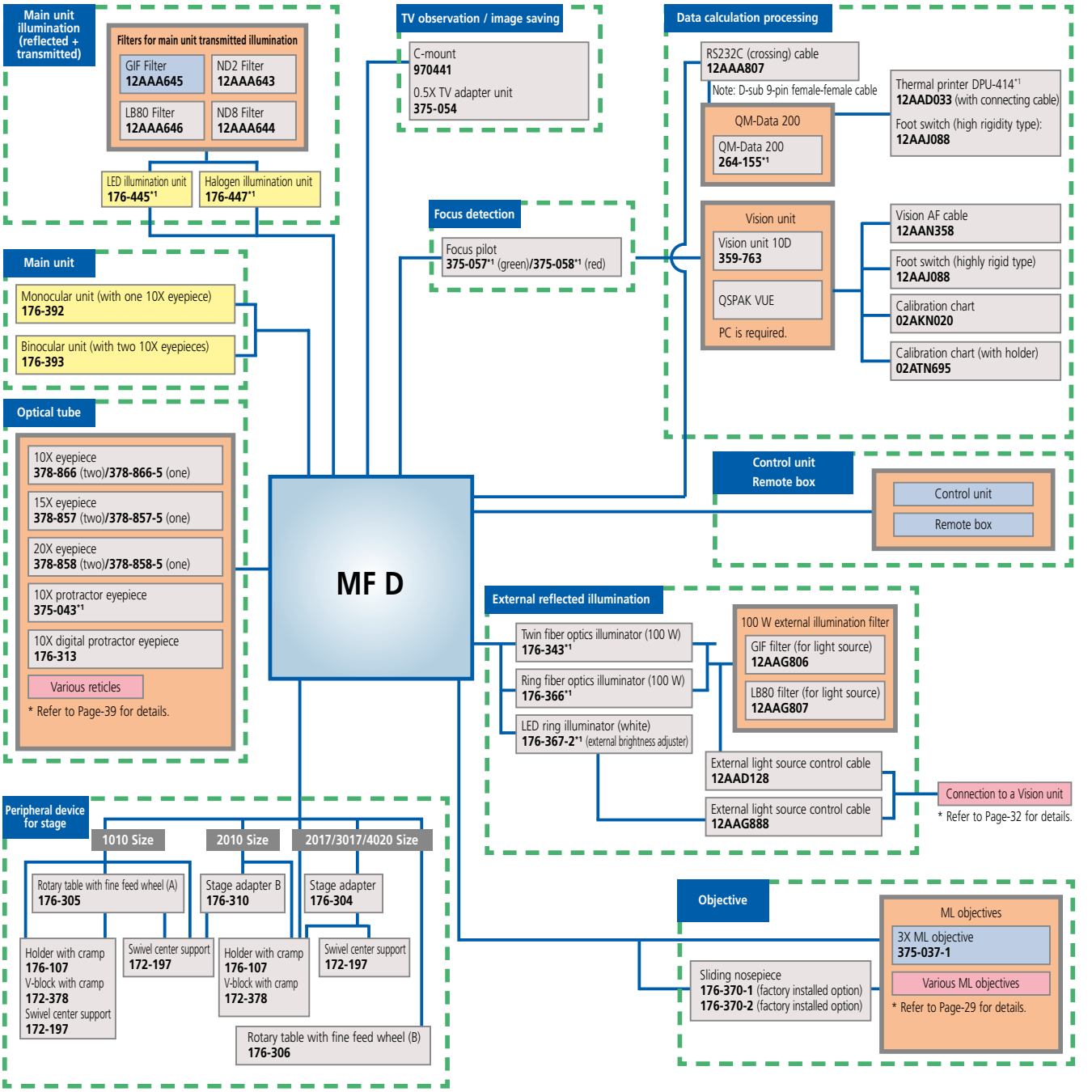

Optional peripheral device

- Vibration damping stand **176-308**
- Mounting stand (microscope + QM-Data 200) **176-309**
- Vertical system rack (for Vision Unit) **998923**
- Lens cleaning set **12AAA165**
- Stage micrometer **375-056**

Data management

- Real-time process control **MeasurLink**

Note: A PC is required.

- RS232C (crossing) cable **12AAA807**

Printing of counter data

- Thermal printer DPU414*1 **12AAD033** (with connecting cable)
- Foot switch (highly rigid type) **12AAJ088**

*1 Order No. depends on the destination.

Refer to the corresponding page for details
Required
Standard accessory

Universal measuring microscopes **MF-U Series**

Optional accessories

System diagrams

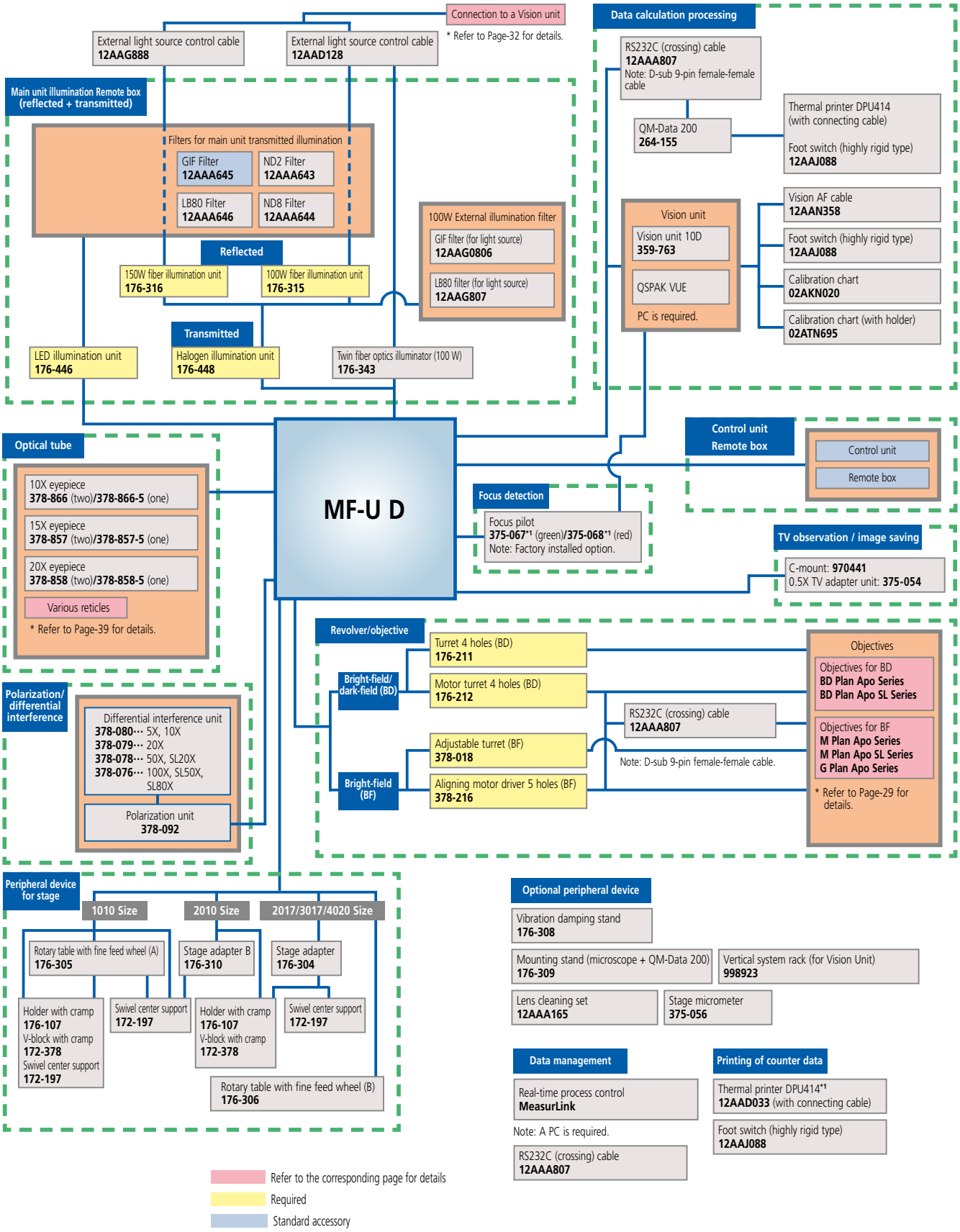

Motor-driven measuring microscopes
MF Series/MF-U Series

To the next stage

Motorized X, Y and Z axes on the measuring microscope provide improved operability. Image Auto Focus (AF) is enabled by using the image detection unit (option).

MF-G2017D

* The binocular tube, eyepieces and LED illumination unit are optional accessories.
* A separate LED control unit and a control unit are included.

MF-UG4020D

* The turret, objectives and LED illumination unit are optional accessories.
* A separate LED control unit and a control unit are included.

MF-UE2017D

* The turret, objectives and LED illumination unit are optional accessories.
* A separate LED control unit and a control unit are included.

Features

- The measuring microscopes' X, Y and Z axes are now motor-driven, the stage can be operated from a remote control box.
  A joystick is used to operate the X and Y axes. A jog shuttle moves the Z axis, thus realizing a natural feeling when handling the equipment.
  Furthermore, these microscopes are equipped with a Z limit that you can use to set the lower limit of the Z-axis movement, which enables the user to prevent collisions of the objective and the workpiece.
- The operator is relieved from fatigue resulting from repeated handle-turning.
- Installing a vision unit allows the performing of vision AF (auto focus).*1
  For the MF-U power type and MF-U power LAF type, selecting the power turret makes it possible for the microscope to automatically recognize the position of the objective in the vision unit.*2
- A power model line-up with large stage sizes ranging from 200×170 mm to 400×200 mm
- A button for coarse and fine feed switching and speed-adjustment function that are highly useful during long stroke sliding and fine positioning, are provided as standard equipment.
- The buttons on the remote control box, which is used to perform operations, have been placed to provide operations that feel natural.
- The remote control box is standard equipped with a data output button and counter reset buttons for the X, Y, and Z axes, which enables you to perform a variety of operations remotely.
- Products equipped with LAF (laser auto focus) are also included in the lineup of MF-U power products, which improves the efficiency of the focusing operation.
  Models that come with LAF are equipped not only with the normal Just Focus (JF) function, but also with the Tracking Focus (TF) function that maintains the focus as the stage moves.
  These functions cater to focusing requirements in a variety of situations, reducing the amount of work that the operator has to perform.

*1: A separate vision AF cable (No. 12AAN358) is required.
*2: A separate RS-232C cable (No. 12AAA807) is required.

Motor-driven measuring microscopes MF Series/MF-U Series

Motor-driven

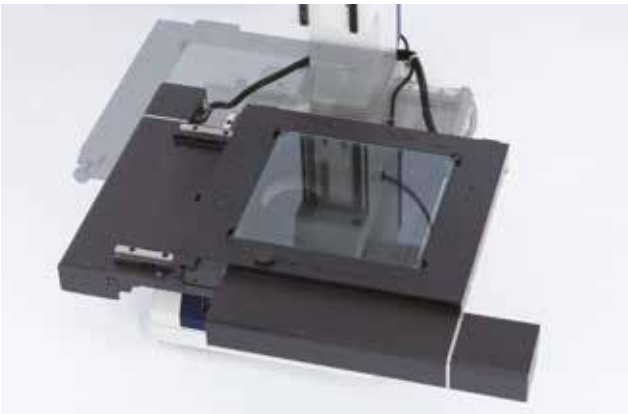

The X, Y, and Z axes are all motor-driven. Movements along the X and Y axes are controlled via a joystick. A jog shuttle operates the Z axis, so operations during measurement can be performed by the remote control box.
This eliminates the conventional handle-turning and focusing operations, reducing fatigue for the operator.
The X and Y axes are driven with a maximum feed speed of 40 mm/s and the Z axis with a maximum feed speed of 20 mm/s. The lineup includes models that have large stages of sizes ranging from 200×170 mm to 400×200 mm.
Furthermore, the change to a motor-driven Z axis enables you to use the new vision AF function, provided you also use the optional vision unit.*1

*1: A separate vision AF cable (No. 12AAN358) must be connected.

Counter display

A digital counter with a large display for good readability and with reset buttons is part of the standard equipment. This counter also offers the following standard functions: display resolution switching, zero-set, direction changeover and smoothing. It is thin in depth but boasts a large display. Because the counter's mounting position can be freely changed, the counter can be placed in the optimum position for the operator.

Calculation processor

QM-Data 200

* Combination of the MF-G2017D and the QM-Data 200

Vision unit

* Combination of the MF-G2017D, the 10D vision unit, and a vision AF cable

While our motor-driven measuring microscopes inherit the options and functions of their manually operated counterparts, they have even greater expandability. As with our conventional measuring microscopes, our motor-driven models can be equipped with the "QM-Data 200" two-dimensional data processing unit and the "Vision Unit" manual image measurement system that detects edges with its installed digital camera.
It is now possible to perform vision AF by using a vision AF cable together with a vision unit, thanks to the new motor drive.

Auto Focus
Vision AF (common option)

By using an optional vision unit and vision AF cable, you can perform vision AF. In the vision unit software QSPAK, the position in the acquired image data with the highest contrast is detected and the autofocus operation performed. This operation can be conducted faster than carrying out focusing with the naked eye, which contributes to reduction in operation time and operator fatigue.

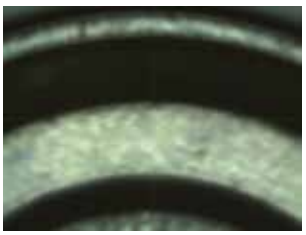

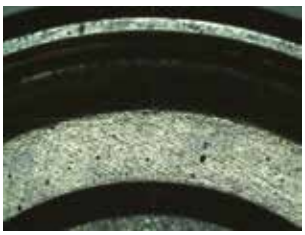

Power turret (option for Motor drive MF-U / MF)

The customer has the choice between different turrets for the MF-U power product and MF-U power LAF product. By selecting the power turret and equipping the measuring microscope with an optional vision unit, it is possible to change and detect the turret position.*1

This is a new function that is available in the QSPAK VUE version 4.1 and subsequent versions of the 10D vision unit software.

You can use the software to change and automatically detect the turret position, so there is no longer any need to handle the turret. Furthermore, this also fixes the problem of forgetting to change calibration values when you change the magnification, thereby providing you with a system that is more reliable and easy to use.

*1: A separate RS-232C cable (No. 12AAA807) is required.

Turret position display in QSPAK

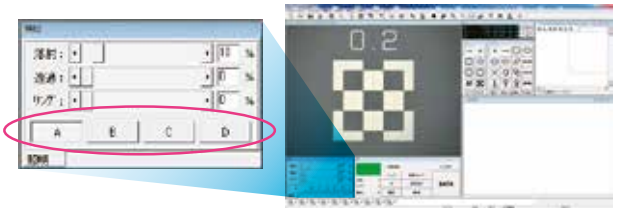

*This image corresponds to 4-hole power turrets and 4-hole turrets with sensors.

Laser Auto Focus (Power LAF type only)

LAF (laser autofocus) can be performed by the power LAF product. By employing AF that uses the TTL (Through The Lens) method, in which a semiconductor laser beam with a wavelength of 690 nm passes through the lens, these microscopes can perform AF even on minutely-small areas.

Laser autofocus has the advantage of better repeatability than focusing with the naked eye, and it can be used to measure heights. Furthermore, the following two types of focus functions are equipped as standard: JF (Just Focus), which can be used to target the laser on the point where you want to focus in order to detect the height, and TF (Tracking Focus), which always tracks the focus position.

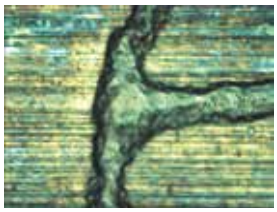

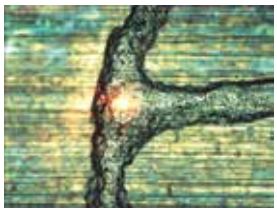

Motor-driven measuring microscopes
MF Series/MF-U Series

Specifications for MF D

Model No.		MF-G2017D	MF-G3017D	MF-G4020D
Order No.		176-781*	176-782*	176-783*
Optical tube (eyepiece(s) required)		Monocular or binocular (angle of column: 25°)		
		Standard TV camera port for all models, reticle (broken cross-hair, line width: 5μm), observation/TV camera = 50/50		
Observation image		Erect image		
Observation method		Bright-field observation		
Eyepiece (optional) Adjustable diopter		10X (eyepiece field number: 24), 15X, 20X Note: Monocular - one 10X eyepiece provided as standard; Binocular - two 10X eyepieces provided as standard		
Objective (optional)		ML objective 3X (provided as standard), 1X, 5X, 10X, 20X, 50X, 100X		
Z axis	Max. workpiece height	220mm		
	Feed mechanism	Motordrive (Maximum measuring speed: 20mm/s)		
Illumination unit (required)	LED	Transmitted: Telecentric, built-in aperture diaphragm, white LED light source, stepless brightness adjustment, equipped with cooling fan Reflected: Kohler illumination with adjustable aperture diaphragm, white LED light source, stepless brightness adjustment Control unit: Power switch (main switch), AC power supply input connector (100 to 240V)		
	Halogen	Transmitted: Telecentric, built-in aperture diaphragm, 12V/50W halogen lamp, stepless brightness adjustment, with cooling fan Reflected: Kohler illumination with adjustable aperture diaphragm, 12V50W halogen lamp, stepless brightness adjustment with cooling fan Control unit: Power switch (main switch), AC power supply input connector (100 to 240V)		
Illumination filter		One GIF filter is provided as standard (and mountable for both transmitted and reflected illumination)		
Stage	Measurement range	200×170mm	300×170mm	400×200mm
	Tabletop size	410×342mm	510×342mm	610×342mm
	Effective stage glass size	270×240mm	370×240mm	440×240mm
	Swiveling angle	±5°		±3°
	Maximum table load	20kg		15kg
Measurement system		High-accuracy digital scale		
Measuring accuracy*1 (X and Y axes, when not loaded)		(2.2 + 0.02L)μm, L: measuring length (mm)		
Digital display	Minimum reading	1/0.5/0.1μm switchable		
	Display axes	X, Y and Z axes		
	Functions	Zero-setting, direction switching		
Remote BOX		Joystick (X and Y axes drive), lock button (X and Y axes), speed adjustment (X,Y and Z axes), coarse/fine adjustment button (X, Y and Z axes) Jog shuttle (Z axis drive), limit setting (Z axis), emergency stop switch, power source backup switch AF button (vision auto focus): effective when connecting to vision unit (optional) Reset button (X, Y and X axes counter), data output button		
Main unit dimensions (WxDxH)		632×892×782mm	682×892×782mm	757×907×782mm
Main unit mass		150kg	158kg	164kg
Control unit dimensions		355×364×106.5mm		
Main unit mass		7kg		
Dimensions for control unit for illumination unit (WxDxH)		114×365×96mm		
Mass for control unit for illumination unit		LED: 3.5kg, halogen: 4kg		
Maximum power consumption		230W		

* To denote your AC power cable add the following suffixes to the order No.: D for CEE, E for BS
*1: Measured in conformance with JIS B 7153.

Specifications for MF-U D

		Motorized			Motorized LAF		
BF (brightfield)	**Model No.**	**MF-UG2017D**	**MF-UG3017D**	**MF-UG4020D**	**MF-UE2017D**	**MF-UE3017D**	**MF-UE4020D**
	Order No.	**176-784***	**176-785***	**176-786***	**176-790***	**176-791***	**176-792***
BD (brightfield/darkfield)	**Model No.**	**MF-UH2017D**	**MF-UH3017D**	**MF-UH4020D**	**MF-UF2017D**	**MF-UF3017D**	**MF-UF4020D**
	Order No.	**176-787***	**176-788***	**176-789***	**176-793***	**176-794***	**176-795***
Optical tube (eyepiece: required)		Tilting trinocular tube (angle of column: 0 to 30°), Siedentoph type (pupil distance adjustment: 51 to 76mm), Built-in 1X tube lens, reticle (broken cross-hair, line width: 5μm), observation TV camera = 50/50					
Observation image		Erect image					
Observation method		BF, DF (only for MF-UH and UF types), simple polarization, differential interference					
Eyepiece (optional) Adjustable diopter		10X (eyepiece field number: 24, two eyepieces provided as standard), 15X, 20X					
Turret (required)	Bright-field (BF)	Adjustable manual turret or adjustable power turret (Select one.)			Manual turret with BF sensor, adjustable power turret*1		
	Bright-field/dark-field (BD)	Manual turret or power turret (Select one.)			Manual turret with BD sensor, power turret*1		
Objective (optional)	Bright-field (BF)	**M Plan Apo, M Plan Apo SL, G Plan Apo series**					
	Bright-field/dark-field (BD)	**BD Plan Apo, BD Plan Apo SL series**					
Z axis	Max. workpiece height	220mm					
	Feed mechanism	Motor drive (measuring speed: max. 20mm/s)					
Illumination unit (required)	LED	Transmitted: Telecentric, built-in aperture diaphragm, white LED light source, stepless brightness adjustment, equipped with cooling fan Reflected: Kohler illumination with adjustable aperture diaphragm, white LED light source, stepless brightness adjustment , equipped with cooling fan Control unit: Power switch (main switch), AC power supply input connector (100 to 240V)					
	Halogen	Transmitted: Telecentric, built-in aperture diaphragm, 12V/50W halogen lamp, stepless brightness adjustment, with cooling fan Reflected: BF/BD Kohler illumination with adjustable aperture diaphragm, 12V100W or 12V15W halogen lamp (selectable), external fiber illumination, stepless brightness adjustment Control unit: Power switch (main switch), AC power supply input connector (100 to 240 V)					
Illumination filter		One GIF filter is provided as standard (and mountable for both transmitted and reflected illumination)					
Stage	Measuring range	200×170mm	300×170mm	400×200mm	200×170mm	300×170mm	400×200mm
	Tabletop size	410×342mm	510×342mm	610×342mm	410×342mm	510×342mm	610×342mm
	Effective stage glass size	270×240mm	370×240mm	440×240mm	270×240mm	370×240mm	440×240mm
	Swiveling angle	±5°		±3°	±5°		±3°
	Maximum table load	20kg		15kg	20kg		15kg
Measurement system		High-accuracy digital scale					
Measuring accuracy*2 (X and Y axes, when not loaded)		(2.2 + 0.02L)μm, L: measuring length (mm)					
Digital display	Minimum reading	1/0.5/0.1μm switchable					
	Display axes	X, Y and Z					
	Functions	Zero-setting, direction switching					
Remote BOX		Joystick (X and Y axes drive), lock button (X and Y axes), speed adjustment (X,Y and Z axes), coarse/fine adjustment button (X, Y and Z axes) Jog shuttle (Z axis drive), limit setting (Z axis), emergency stop switch, power source backup switch AF button (vision auto focus): effective when connecting to vision unit (optional) LAF button (laser auto focus): effective only for LAF models, just focus (JF), tracking focus (TF) Reset button (X, Y and X axes counter), data output button					
Laser auto focus (LAF)		—	—	—	○	○	○
Main unit dimensions (WxDxH)		632×892×782mm	632×892×782mm	757×907×782mm	608×790×846mm	658×790×846mm	733×790×846mm
Main unit mass		150kg	158kg	164kg	155kg	163kg	169kg
Dimensions for control unit for illumination unit (mm)		355×364×106.5mm					
Main unit mass		7kg					
Dimensions for control unit for illumination unit (WxDxH)		114×365×96mm					
Mass for control unit for illumination unit		LED: 3.5kg, halogen: 3.5kg					
Maximum power consumption		230W					

* To denote your AC power cable add the following suffixes to the order No.: D for CEE, E for BS
*1: Make sure that you use RS-232C cable (No. 12AAA807) to connect a LAF model and a power turret.
*2: Measured in conformance with JIS B 7153.

Motor-driven measuring microscopes
MF Series/MF-U Series

Dimensions

The LED illumination unit is shown on the drawings below.
The control unit is placed on the side of the microscope or directly attached to the rear of the column
The cable for connecting the control unit and microscope main unit measures 600 mm in length.

MF D

Unit: mm

MF-G2017D

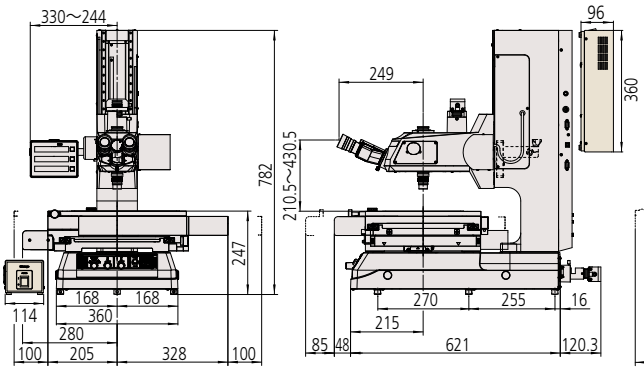

MF-G3017D

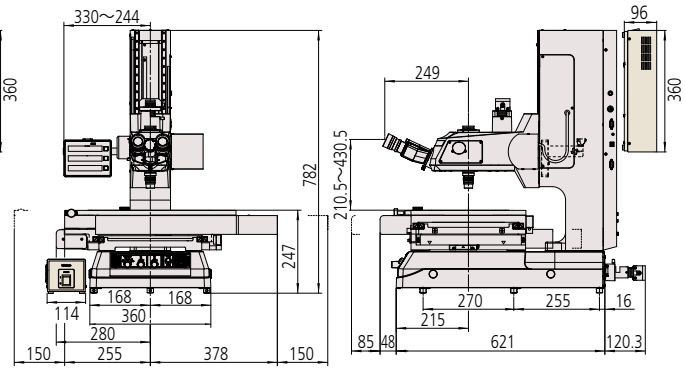

MF-G4020D

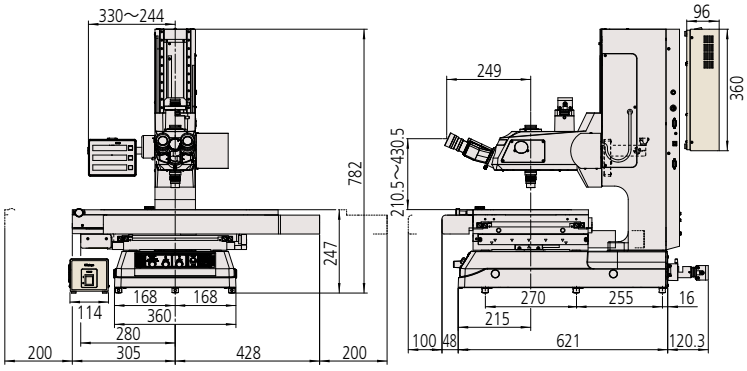

MF-U D (Motorized models)

Unit: mm

MF-UG2017D

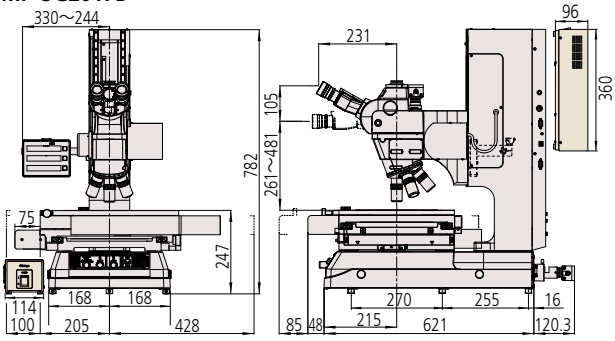

MF-UG3017D

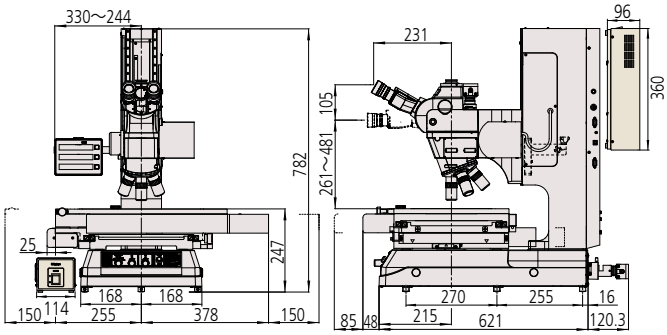

MF-UG4020D

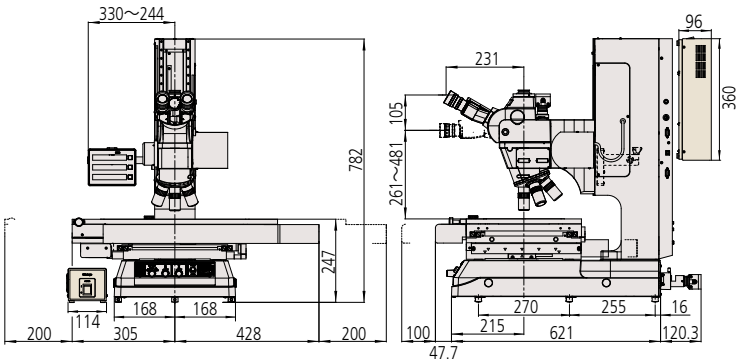

The LED illumination unit is shown on the drawings below.
The control unit is placed on the side of the microscope or directly attached to the rear of the column
The cable for connecting the control unit and microscope main unit measures 600 mm in length.

MF-U D (Motorized LAF models)

Unit: mm

MF-UF2017D

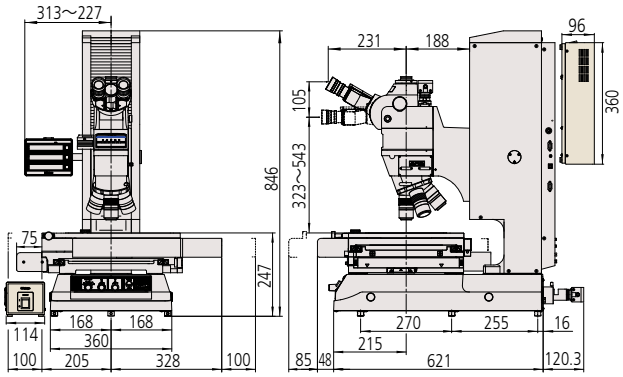

MF-UF3017D

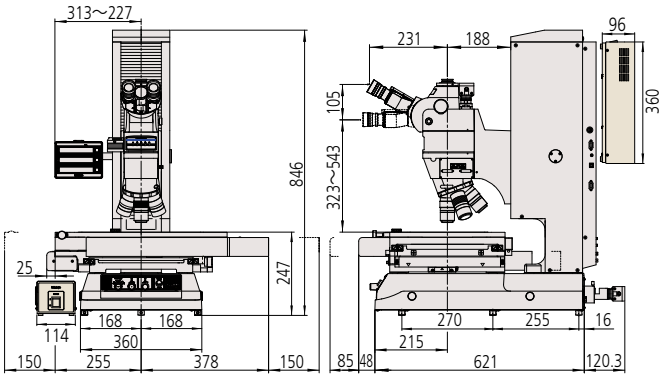

MF-UF4020D

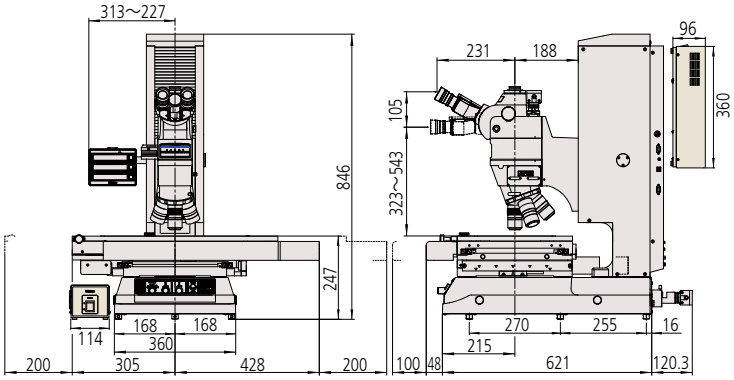

Measuring microscopes **MF Series/MF-U Series**

Optional accessories

System diagrams

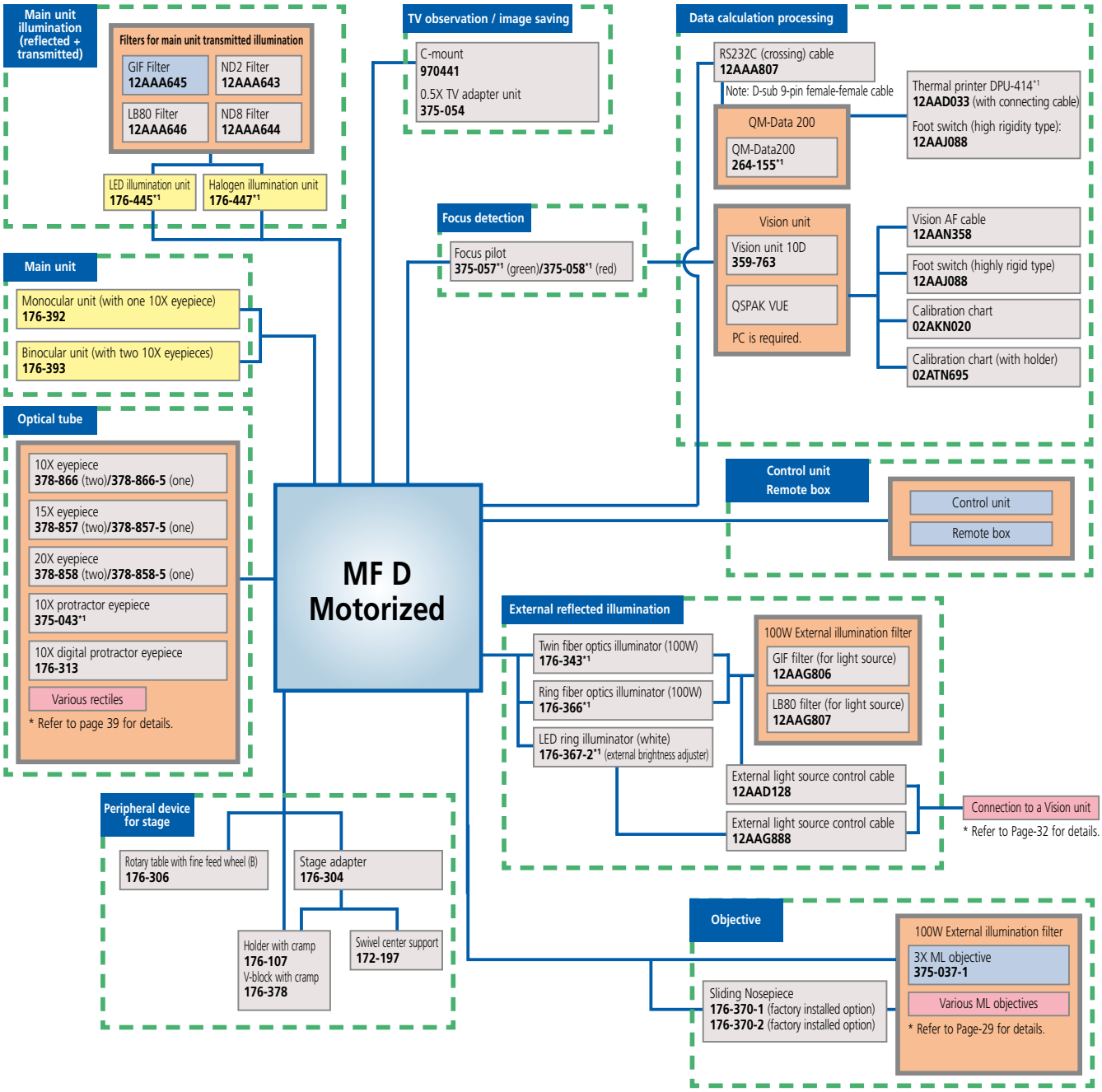

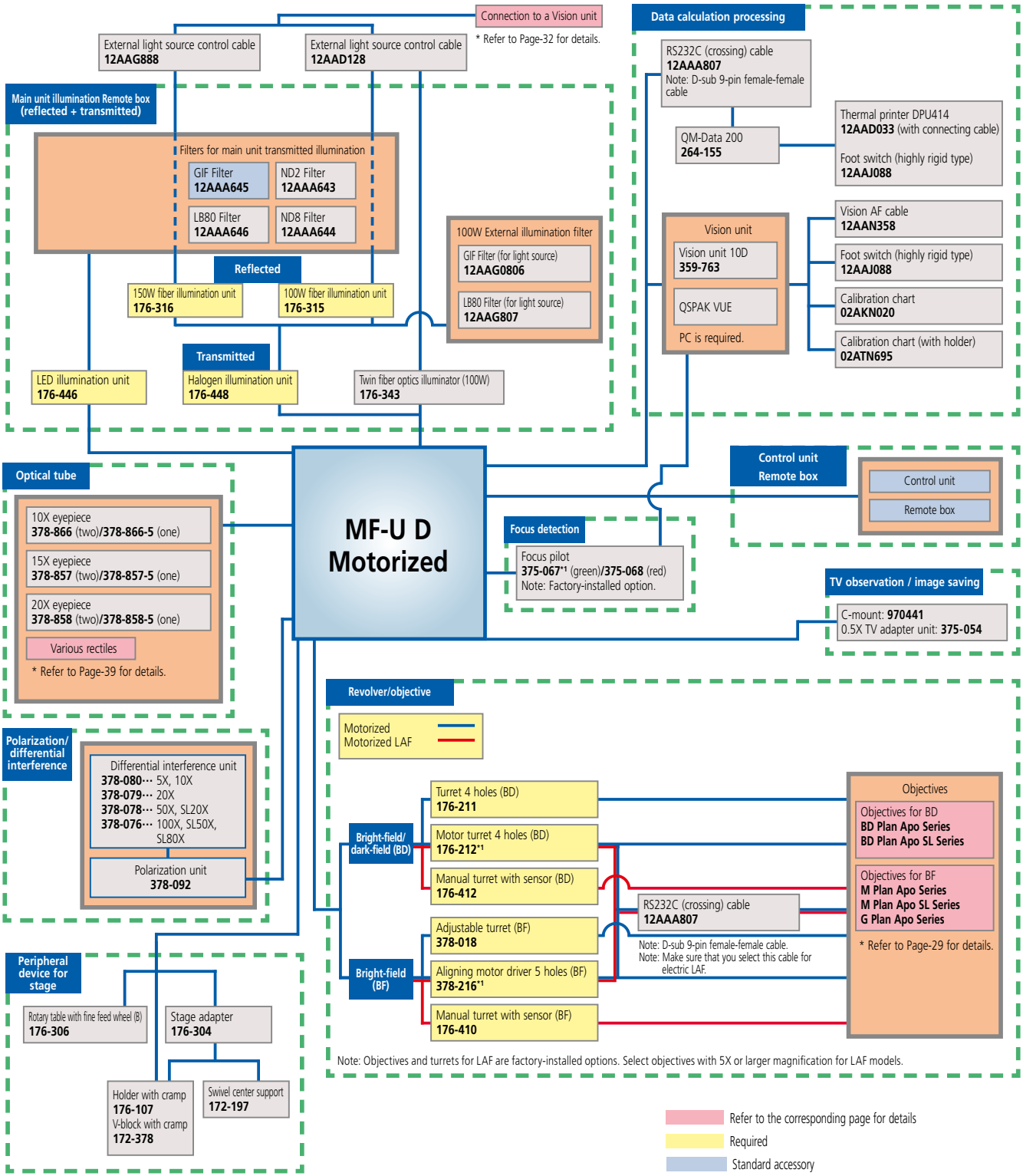

Printing of counter data

- Thermal printer DPU414*1
  12AAD033 (with connecting cable)
- Foot switch (highly rigid type)
  12AAJ088

Data management

- Real-time process control
  MeasurLink
  Inspection table creation program
  MeasureReport

Note: A PC is required.

- RS232C (crossing) cable
  12AAA807

Optional peripheral device

- Vibration damping stand
  176-308
- Mounting stand (microscope + QM-Data 200)
  176-309
- Vertical system rack (for Vision Unit)
  998923
- Lens cleaning set
  12AAA165
- Stage micrometer
  375-056

Optional accessories
Lenses

Our eyepieces provide a wide field of view (with field number 24 mm when using 10X magnification) to enable easy observation and measurement of objects. The standard objectives provide a bright image with a long working distance and little flare. For both the bright-field and dark-field FS objectives, plan apochromat specifications are used. We think that being able to observe and measure objects without fatigue, even for long periods of time, is very important.

Eyepieces

Eyepieces

	WF10X/24	WF15X/16	WF20X/12
Order No. (1 piece)	**378-866-5**	**378-857-5**	**378-858-5**
Order No. (2 pieces)	**378-866**	**378-857**	**378-858**
Magnification	10X	15X	20X
Field number	24	16	12
Applicable model	**MF D / MF-U D**		

· Only the 10X model includes the eye shade.

· If using a measuring microscope older than the MF B series with a binocular eyepiece, select Order No. **378-866**.

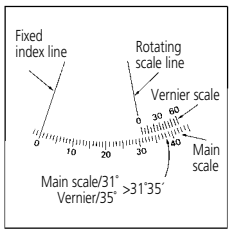

Protractor Eyepiece

Order No.	**375-043**
Magnification	10X
Field number	21
Scale	360° 5′
Applicable model	**MF D**

Digital Protractor Eyepiece

Order No.		**176-313**[*1]
Eyepiece detector unit	Magnification	10X
	Field number	22
	Reticle	Line width: 5μm for both 90° solid lines and 45° chain lines
	Measuring range	Degrees: 0.00° to ± 369.99° Arc-minutes: 0° 00′ to ± 369° 59′
	Detection method	Electrostatic capacitance encoder
	External dimensions (mm)	ø120×140(D)
Digital counter (standard equipment) Supports CE	Minimum reading	0.01° (degree) or 1′ (arc-minute)
	Function	Zero-set ABS*/INC selection, degree or arc-minute selection, data output (with foot switch **12AAJ088**)
	Output	RS-232C
	External dimensions (mm)	143(W)×112(D)×57(H)
	Power supply	AC100~120V
	Applicable model	**MF D** (fixable to the top surface of the counter)

*This measurement system does not always supply power to the internal scale to display absolute values. The system measures coordinates from any fixed origin.

*1 To denote your AC power cable add the following suffixes to the order No.: D for CEE, E for BS

Optical tubes

Monocular Tube

Order No.	**176-392**
Magnification	10X
Field number	24
Applicable model	Required for **MF D**

Binocular Tube

Order No.	**176-393**
Magnification	10X
Field number	24
Applicable model	Required for **MF D**

Tilting Binocular Tube

Magnification	10X
Field number	24
Angle of column (tilt angle)	0~30°
Applicable model	Included in **MF-U D** as standard

For inspection or observation using a microscope, high resolution and an ultra-long working distance are important factors for objective usability. Also, applying the apochromat specifications (for correction of the red, blue and yellow wavelengths) to compensate chromatic aberration over a wide range of wavelengths and the plan specifications to correct distortion in the image surface, and point aberrations, is also important for getting a clear image across the whole field of view. Mitutoyo's high quality FS objectives provide these characteristics. This fact expands the range of applications for a microscope and greatly improves its usability. These objectives are also helpful when installed in a measuring microscope. The M Plan Apo series and BD Plan Apo series are developed for bright-field observation. The SL (super long) specifications are available for when a long working distance is required. The G Plan Apo series is available corrected for observation through glass of thickness 3.5 mm (or 2 to 5 mm upon special order).

ML objectives

Limited-correction optical system ... For **MF D**

Model No.	Order No.	Magnification	Numerical Aperture (NA)	Working Distance (mm)	Resolving Power (µm)
ML 1X	**375-036-2**	1X	0.03	61.0	9.2
ML 3X	**375-037-1**	3X	0.09	77.0	3.06
ML 5X	**375-034-1**	5X	0.13	61.0	2.12
ML 10X	**375-039**	10X	0.21	51.0	1.31
ML 20X	**375-051**	20X	0.42	20.0	0.65
ML 50X	**375-052**	50X	0.55	13.0	0.5
ML 100X	**375-053**	100X	0.70	6.0	0.4

FS objectives

Infinity corrected optical system ... For **MF-U D**
For bright-field (**BF**) observation and measurement

Model No.	Order No.	Magnification	NA	Working Distance (mm)	Resolving Power (µm)
M Plan Apo 1X	**378-800-3**	1X	0.025	11.0	11.0
M Plan Apo 2X	**378-801-6**	2X	0.055	34.0	5.0
M Plan Apo 5X	**378-802-6**	5X	0.14	34.0	2.0
M Plan Apo 7.5X	**378-807-3**	7.5X	0.21	35.0	1.3
M Plan Apo 10X	**378-803-3**	10X	0.28	34.0	1.0
M Plan Apo 20X	**378-804-3**	20X	0.42	20.0	0.7
M Plan Apo 50X	**378-805-3**	50X	0.55	13.0	0.5
M Plan Apo 100X	**378-806-3**	100X	0.70	6.0	0.4
M Plan Apo SL 20X	**378-810-3**	20X	0.28	30.5	1.0
M Plan Apo SL 50X	**378-811-3**	50X	0.42	20.5	0.7
M Plan Apo SL 80X	**378-812-3**	80X	0.55	15.0	0.6
M Plan Apo SL 100X	**378-813-3**	100X	0.70	13.0	0.5
M Plan Apo SL 200X	**378-816-3**	200X	0.62	13.0	0.4
M Plan Apo HR 50X	**378-814-4**	50X	0.75	5.2	0.4
M Plan Apo HR 100X	**378-815-4**	100X	0.90	1.3	0.3
G Plan Apo 20X (t3.5)	**378-847**	20X	0.28	Air conversion: 29.42	1.0
G Plan Apo 50X (t3.5)	**378-848-3**	50X	0.50	Air conversion: 13.89	0.6
Lens set B1	**378-911**	A set including M plan Apo 10X, 20X, 50X, and 100X			
Lens set B2	**378-912**	A set including M plan Apo 2X, 5X and SL20X			
Lens set B3	**378-913**	A set including M plan Apo 5X, 10X, 20X, and 50X			
Replacement adapter for FS objective	**378-026-1**	Used when a bright-field (**BF**) lens is attached to a bright-field and dark-field (**BD**) turret			

For observation and measurement using a bright-field or dark-field (**BD**)

Model No.	Order No.	Magnification	NA	Working Distance (mm)	Resolving Power (µm)
BD Plan Apo 2X	**378-831-7**	2X	0.055	34.0	5.0
BD Plan Apo 5X	**378-832-7**	5X	0.14	34.0	2.0
BD Plan Apo 7.5X	**378-830-7**	7.5X	0.21	34.0	1.3
BD Plan Apo 10X	**378-833-7**	10X	0.28	34.0	1.0
BD Plan Apo 20X	**378-834-7**	20X	0.42	20.0	0.7
BD Plan Apo 50X	**378-835-7**	50X	0.55	13.0	0.5
BD Plan Apo 100X	**378-836-7**	100X	0.70	6.0	0.4
BD Plan Apo SL 20X	**378-840-7**	20X	0.28	30.5	1.0
BD Plan Apo SL 50X	**378-841-7**	50X	0.42	20.0	0.7
BD Plan Apo SL 80X	**378-842-7**	80X	0.50	13.0	0.6
BD Plan Apo SL 100X	**378-843-7**	100X	0.55	13.0	0.5
BD Plan Apo HR 50X	**378-845-7**	50X	0.75	5.2	0.4
BD Plan Apo HR 100X	**378-846-7**	100X	0.90	1.3	0.3
Lens set D1	**378-931**	A set including BD plan Apo 10X, 20X, 50X, and 100X			
Lens set D2	**378-932**	A set including BD plan Apo 2X, 5X, and SL20X			
Lens set D3	**378-933**	A set including BD plan Apo 5X, 10X, 20X, and 50X			

* Refer to Catalog No. E4191 "MICROSCOPE UNITS AND OBJECTIVES" for details.

Optional accessories
Illumination

The way illumination (a light source) is used is important for observing and measuring various inspected objects such as semiconductors, electronic or electric components, automobile precision components, resin moldings, tools, medical products, and printed materials with clarity and high contrast. Select the best illumination according to the shape, surface conditions, color, and materials in the inspected object.

A: Reflected illumination and transmitted illumination (required)

①

LED illumination unit	
Order No.	**176-445***
	Consists of lamp housing (for reflected illumination and transmitted illumination) and an LED control unit. The LED control unit can be fixed to the rear of the column of the microscope main unit. White light LED (low power consumption: 45W) Rated lifetime: approximately 30,000 hours Continuously variable brightness control Built-in cooling fan (includes an alarm for indicating that the fan has stopped) A color filter can be attached to a reflected or transmitted illumination unit.
External dimensions (mm)	Reflected illumination unit: ø33×86 (maximum protrusion)
	Transmitted illumination unit: 68×103 (maximum protrusion)
	LED control unit: 114(W)×360(D)×96(H)
Applicable model	**MF D**

MF series

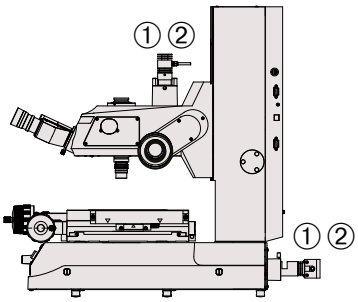

②

Halogen illumination unit	
Order No.	**176-447* (MF D)/176-448 (MF-U D)**
	Consists of lamp housing (for reflected illumination and transmitted illumination) and a halogen control unit. The halogen control unit can be fixed to the rear of the column of the microscope main unit. 12V, 50W halogen lamp, continuously variable brightness control Built-in cooling fan (includes an alarm for indicating that the fan has stopped) A color filter can be attached.
External dimensions (mm)	Reflected and transmitted illumination unit: 91×106 (maximum protrusion)
	Halogen control unit: 114(W)×360(D)×96(H)
Applicable model	**MF D/MF-U D**

Note: **MF-U D** is available only for transmitted illumination.

MF-U series

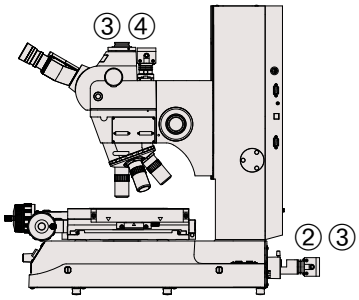

③

LED illumination unit	
Order No.	**176-446***
	Made up of lamp housing (for reflected illumination and transmitted illumination) and an LED control unit. The LED control unit can be fixed to the rear of the column of microscope main unit. White light LED (low power consumption: 55W) Rated lifetime: approximately 30,000 hours Continuously variable brightness control Built-in cooling fan (includes an alarm for indicating that the fan has stopped) A color filter can be attached to a reflected or transmitted illumination unit.
External dimensions (mm)	Reflected illumination unit: 68×66 (maximum protrusion)
	Transmitted illumination unit: 68×103 (maximum protrusion)
	LED control unit: 114(W)×360(D)×96(H)
Applicable model	**MF-U D**

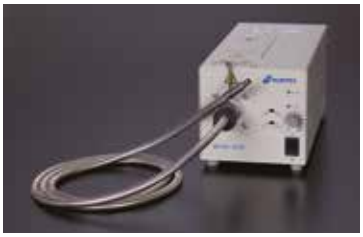

④

100W and 150W fiber optics cable illumination unit (external light source)	
Order No.	**176-315* (100W) ·176-316* (150W)**
100W	12V, 100W halogen lamp (No. **517181**) Rated life: 1,000 hours
	12V, 100W high brightness halogen lamp (No. **12BAD602**) Rated life: 50 hours
	Continuously variable brightness control
External dimensions (mm)	76(W)×235(D)×120(H), Fiberglass cable length: 1,500
150W	15V, 150W halogen lamp (No. **12BAJ076**) Rated life: 500 hours
	15V, 150W high brightness halogen lamp (No. **12BAJ075**) Rated life: 50 hours
	Continuously variable brightness control
External dimensions (mm)	120(W)×273(D)×119(H), Fiberglass cable length: 1,500
Applicable model	For reflected illumination when selecting the halogen illumination unit with **MF-U D**

* To denote your AC power cable add the following suffixes to the order No.:
D for CEE, E for BS

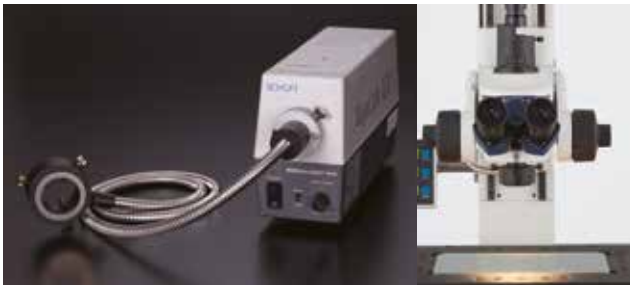

B **Dual swan-neck light pipe (external light source)**

Order No.	**176-343***
	Fixed to the rear of the microscope column Continuously variable brightness control Includes a condenser lens Auto-brightness control can be used for the Vision Unit system (with external light source control cable No. **12AAD128**). 12V, 100W halogen lamp (No. **517181**), rated lifetime: 1,000 hours 12V, 100W high brightness halogen lamp (No. **12BAD602**), rated life: 50 hours LB80 filter (No. **12AAG807**)
External dimensions (mm)	76(W)×235(D)×120(H): includes only the light source
	Fiber optics cable length: 700 (from the rear fixed portion to the front edge)
	Maximum fiber bending radius: 60
Applicable model	**MF D / MF-U D**

* Order No. depends on the destination.

C **Fiber-optic ring light (external light source)**

Order No.	**176-366***
	Continuously variable brightness control Includes a condenser lens Auto-brightness control can be used for the Vision Unit system (with external light source control cable No. **12AAD128**). 12V, 100W halogen lamp (No. **517181**) Rated life: 1,000 hours 12V, 100W high brightness halogen lamp (No. **12BAD602**) Rated life: 50 hours LB80 filter (No. **12AAG807**)
External dimensions (mm)	76(W)×235(D)×120(H): includes only the light source
	Circular illumination unit: outside diameter: 60, inside diameter: 35
	Maximum fiber length: 1,000
Applicable model	**MF D** (ML objective 10X or lower model)

* Order No. depends on the destination.

A: Reflected and transmitted illumination

The light is projected vertically downward onto the surface of an inspected object through an objective. An LED or halogen lamp is selectable as light source.

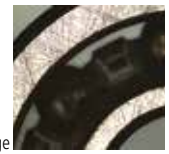

Image

B: Dual swan-neck light pipe

Light piped from a standalone halogen lamp unit and projected from two heads is suitable for three-dimensional observation. The condenser lens included as standard makes high brightness spot lighting possible.

Image

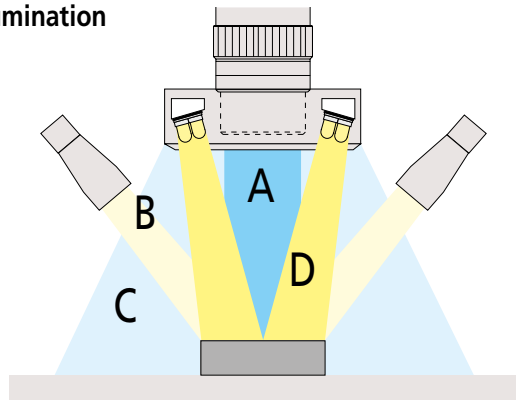

The four images show the same portion of an inspected object.

C: Fiber-optic ring light

Light piped from a standalone halogen lamp unit and projected from around the objective enables observation that is less affected by shadows due to surface irregularities and is suitable for image measurement.

Image

D: LED ring light

Light from an LED array surrounding the objective enables high contrast observation of deeply colored resins, circuit boards, and small cylindrical objects and is also suitable for image measurement. Plus, adjusting the brightness does not change the coloring.

Image

D **LED ring light**

Order No.	**176-367-2***
	Continuously variable brightness control Auto-brightness control can be used for the Vision Unit system (with external light source control cable No. **12AAG888**).
External dimensions (mm)	75(W)×150(D)×90(H): only the control part
	Ring LED part: outside diameter: 70, height: 68 to 93
	LED cable length: 1,500
Applicable model	**MF D** (ML objective 10X or lower model)

* To denote your AC line voltage add the following suffixes to the order No.:
(e.g.: 176-343D); D for CEE, E for BS

D **LED ring light (for FS objectives)**

Order No.	Please contact us.
	Fixed to an objective and projects ring-shaped white LED light Continuously variable brightness control Auto-brightness control can be used for the Vision Unit system (with external light source control cable No. **12AAG888**).
External dimensions (mm)	75(W)×150(D)×90(H): only the control part
	Ring LED part: outside diameter: 70, height: 65 to 80
	LED cable length: 1,000
Applicable model	**MF-U D** (FS objective M plan Pro 10X or lower model)

Optional accessories
Manual image measurement
Vision unit

The Vision Unit turns your measuring microscope into a high-performance vision measuring system capable of significantly increasing productivity in quality assurance operations. Vision measurement simply involves generating enough points from the edges of workpiece features to ensure accuracy and then letting powerful PC-based software calculate the measurement results. An image measuring model that aligns edges during image measurement and a dedicated electronic model that can be used for general purposes are available. Both models can print out the measurement results or output them to spreadsheet software or inspection tables.

Typical system

For details, see Catalog No. E14008

Features

- Auto edge detection tool and various macro icons for easy measurement
- Easy-to-use graphics and measurement navigation
- Enables measurement results to be output to MS Excel*1 and an inspection table created on the same PC
- Enables tolerance zone analysis for measurement and calculation results, and various types of statistical processing for each item
- Auto-brightness control that precisely duplicates an illumination setting (when using the measuring microscopes MF-D and MF-UD together)
- Enables measurement within one screen
- Images can be input or saved (in BMP or JPEG format).
- Image AF is possible when using the motorized measuring microscope MF series/MF-U series (refer to page 20).

*1. MS Excel is a Microsoft product.

More user-friendly manual measurement environments available (Wide-field measurement)

Upsizing of the image sensor has made the field of view approximately 40% wider than conventional for both X and Y directions, thus allowing concurrent observation of the circumference of a measurement point.

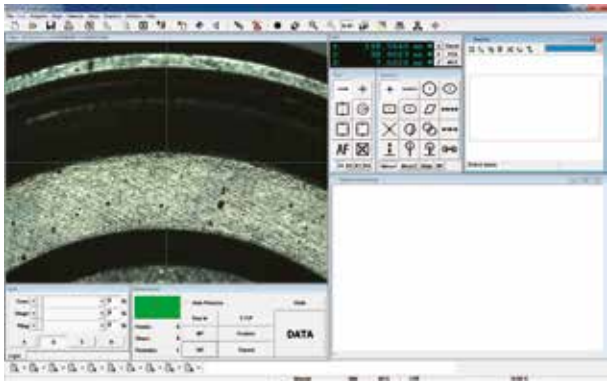

* An actual image using objective ML1X plus LED ring light

Edge detection support tools (One-click tools)

[Patent registered (application country: Japan)]

Each tool has the function of automatically discriminating operations from self tool setup to edge detection/calculation by merely single-clicking the vicinity of a measurement point edge with the mouse. If measurement is performed in one tool window, these tools drastically reduce measurement time since stage travel becomes unnecessary.

One-click circle tool

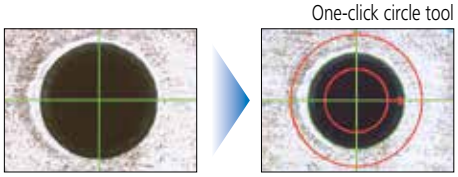

One-click box tool

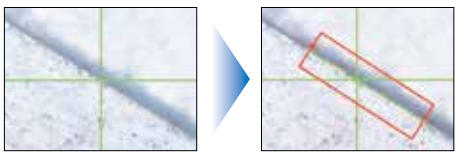

Coordinate system creation key

Coordinate system

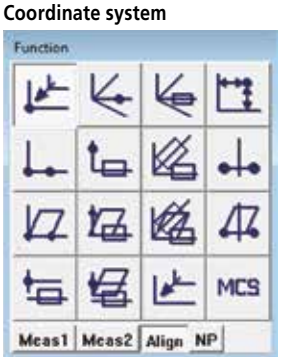

Creation key1

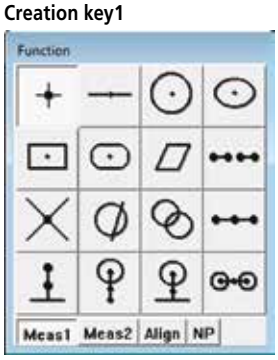

Creation key2

Coordinate value input formatting function (NP measurement)

Specifications

Vision Unit 10D	
Order No.	**359-763**
Magnification of optical system	0.5X: when a microscope is attached (0.5X: when using a TV adapter)
Image detection	High sensitivity 1/2-inch CMOS color camera with 300 million pixels
Resolution	0.1μm
Measuring accuracy for each axis (in a 20°C environment)	Depends on measuring microscope
Accuracy (in a 20°C environment)	Depends on measuring microscope Reference: when using a 3X ML objective (performing an inspection using our standard sample) Screen-internal measuring accuracy: ±2.5μm or less Screen-internal repeatability (2σ): ±1μm or less
PC system*	Windows 7
Software*	QSPAK Vision Unit
Applicable model	**MF D / MF-U D**

* Software (QSPAK) and calculation processor are required separately.

FORMPAK-QV (optional software)

FORMPAK-QV allows contour analysis and contour tolerancing against the nominal value, from the data acquired using QSPAK.

- Contour tolerancing function
- Fine contour analysis function
- Report generation function

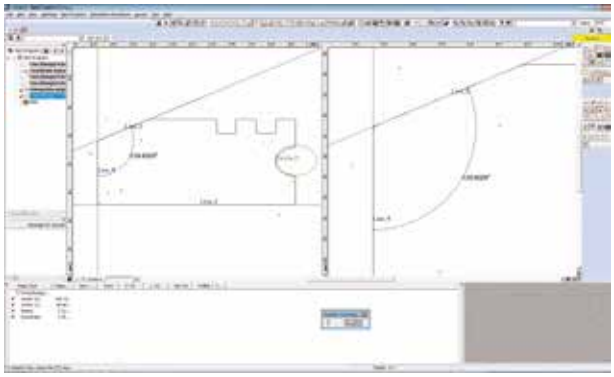

CAD import & export (optional software)

Operability has greatly improved, and the time required to create a part program has been vastly reduced, by importing the CAD data (DXF, IGES), as generated at the product-design stage, to QSPAK. The measurement result from QSPAK can be converted to CAD data.

FEATURES

- The nominal value of each measuring item is entered automatically.
- The graphics window can be used to calculate elements.
- Graphics data can be output in a specified CAD data format.

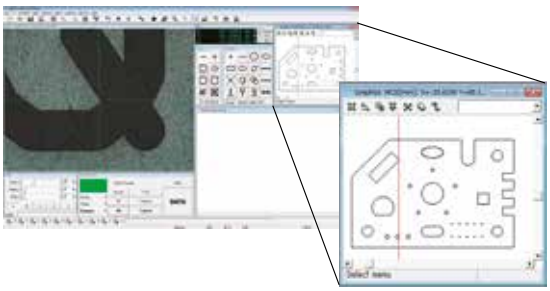

Optional accessories
2-D data processing unit
QM-Data200

Typical system

Foot switch No. **12AAJ088**

Features

- Displays high-contrast color graphics on a large, backlit LCD screen
- Enables frequently-performed complex measurement (such as measuring the distance between two circles) to be performed by pressing just one button
- Teaching function for measuring procedure
  Efficient measurement by performing measuring point navigation in the repeat mode
- Eliminates the need to switch measuring command keys through AI-based measurement (which automatically determines the measured element)
- Includes a user menu in which you can individually register measuring commands or part programs
- Enables tolerance zone measurement for measurement and calculation results, and various types of statistical processing for each item
- Enables measurement results to be output to the MS-Excel*1 PC spreadsheet software in CSV format
- Enables part programs and measurement results to be stored in USB-connected memory*2
- A stand that can be tilted to adjust the angle to an easily viewable position
- Enables measurement during printing

*1. MS-Excel is a Microsoft product.
*2. Not all commercially available USB-connected memory is supported.

Specifications

QM-Data200 (stand type)	
Order No.	**264-155***
Displayed language	Switched among 16 languages (Japanese, English, French, German, Italian, Spanish, Portuguese, Czech, Chinese (traditional), Chinese (simplified), Korean, Turkish, Swedish, Polish, Dutch and Hungarian
Unit of measurement	Length: mm, angle: degree/degree-minute-second (switchable)
Resolution	0.1µm
Program function	Creating, performing, and editing measuring procedures
Statistical processing	The measured item, number of data items, maximum value, minimum value, average value, standard deviation, range, histogram, and statistics for each measuring function (statistics for each command)
Display field	Color TFT LCD (with a backlight)
Tilt feature	Available
I/O connector	XYZ: for linear scale input ... up to 3 axes RS-232C ①: for connecting a PC (measuring result) RS-232C ②: for connecting the counter of the measuring machine main unit FS: for connecting a foot switch PRINTER: for connecting a receipt or external printer (measuring result) USB-FDD: for connecting a USB-FDD (measuring result file, measuring procedure file) USB-MEMORY: for connecting USB memory (measuring result file, measuring procedure file)
File output of measuring result	RS-232C output (CSV format, MUX-10 format)
Power supply	100V to 240V AC
Maximum power consumption	17W (without including options)
External dimensions (mm)	Approximately 260×242×310mm (including a stand)
Weight	Approximately 2.9kg
Applicable model	**MF D / MF-U D**

* To denote your AC line voltage add the following suffixes to the order No.:
(e.g.: 264-155D); D for CEE, E for BS

External dimensions (unit: mm)

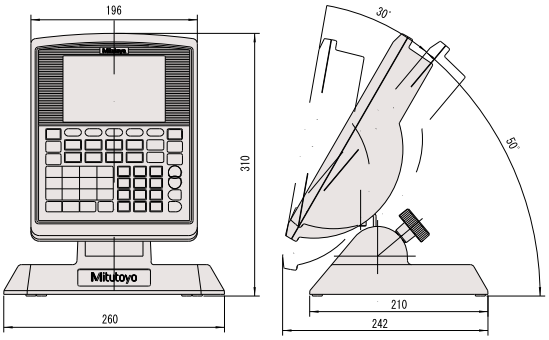

Thermal printer

DPU-414 Manufactured by SII

Specifications

Thermal printer DPU-414 (12AAD033)		
Order No.	Connected to QM-Data 200	Please contact your local Mitutoyo sales office.
	Counter display printing	Please contact your local Mitutoyo sales office. Note: Combined use with footswitch No. **12AAA846**
Printing method		Dot-matrix thermosensitive
Number of printing digits		40 digits (9 normal characters (7 dot matrix)
Printing speed		Maximum 52.5 normal characters/s
External dimensions		160mm(W)×170mm(D)×65.5mm(H) (printer)
Standard accessories		Printer cable, printing paper (1 roll), AC adapter (for 100V)
Spare goods	Printing paper (5 rolls)	**No. 908353** (5 rolls)

Printout example

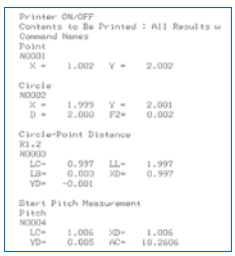

```
Printer ON/OFF
Contents to Be Printed : All Results w
Command Names
Point
N0001
  X =    1.002   Y =    2.002

Circle
N0002
  X =    1.999   Y =    2.001
  D =    2.000   F2=    0.002

Circle-Point Distance
R1.2
N0003
  LC=    0.997   LL=    1.997
  LS=    0.003   XD=    0.997
  VD=   -0.001

Start Pitch Measurement
Pitch
N0004
  LC=    1.006   XD=    1.006
  VD=    0.005   AC=   18.2606
```

Optional accessories

We offer various optional accessories designed to increase microscope usability. These optional accessories are very popular among our customers. They include the focus pilot, which reduces focal point variation; a power turret and power focusing unit, which can be used to change the focus or magnification under precise power control and a rotary table, which has a fine-adjustment knob for comfortably rotating objects under inspection. You can also select the polarization and differential interference contrast unit to support microscopic observation, the TV port adapter to attach a camera, which is required by many people during simultaneous analysis and evaluation, and other optional accessories as required.

Focus detection unit Focus Pilot

Model type	**FP-05**	**FP-05U**
Order No.	**375-057*** (Green) / **375-058*** (Red)	**375-067*** (Green) / **375-068*** (Red)
Light Source	Green LED or Red LED •Concentric circle pattern •Slit pattern  • The focal point is the position where the top and bottom of the pattern are aligned. • The brightness can be adjusted according to the reflectivity of the surface. • Observation with a wide field of view on a TV monitor using 5X optical magnification is available.	
Focusing reproducibility	Approximately 1.5µm (when using a 20X lens) ... This is a reference value based on an inspection performed using our standard sample.	
Optical magnification	0.5X	
Magnification accuracy	± 0.1% (within 2/3 of the center of the field of view)	
Camera	Supports up to 2/3 inch	
TV adapter	Equipped with C-mount, centering or parfocal adjusting mechanism	
Power supply	100 to 240V AC, Maximum power approximately 10W	
External dimensions (mm)	Main unit: 131(H)	
	Console box: 90(W)×78(H)×178(D)	
Applicable model	**MF D**	**MF-U D**

Note: The combination of MF-U and FP-05U is a factory-installed option.

Sliding Nosepieces (Factory-installed Option)

Order No.	**176-370-1** The lens mounted at the centering mechanism (standard) position and the lens mounted at the focal point adjusting mechanism position are parfocal. Note: The magnification of the lens mounted at the focal point adjusting mechanism position is not guaranteed.
Order No.	**176-370-2** Magnification of the lens mounted at the centering mechanism (standard) position and that of the lens mounted at the focal point adjusting mechanism position are guaranteed. Note: The two lenses are not parfocal.
Applicable model	**MF D**

Electric focus unit

Order No.	Please contact your local Mitutoyo sales office.
	Attached to the Z-axis handle on the left side of the microscope to allow fine focus adjustment by turning the electric jog dial by hand. By using a jog shuttle, the variable speed coarse feed focus can be changed in 7-levels.
Maximum feed	0.4µm
Maximum drive speed	3.2mm/s
Driving method	Stepping motor (jog shuttle/jog dial)
Power supply	100 to 240V AC Maximum power consumption: approximately 20W
External dimensions (mm)	Main unit: ø69×99(L)
	Console box: 108(W)×72(H)×193(D)
Applicable model	**MF-U D**

Note: This unit is made to order.

Turrets

Order No.	**176-211**	**176-412**	**378-018**	**176-410**	**176-212***	**378-016***	**378-216***
Supported observation	For bright-field and dark-field (BD)	For bright-field and dark-field with sensor (BD)	For bright-field (BF)	For bright-field with sensor (BF)	For bright-field and dark-field (BD)	For bright-field (BF)	For bright-field (BF)
Number of ways	4	4	4	4	4	4	5
Centering and parfocal mechanism	—		Standard fixed: 1 position Centering and parfocal: 3 positions		—	Standard fixed: 1 position Centering and parfocal: 3 positions	Standard fixed: 1 position Centering and parfocal: 4 positions
Driving method	Manual				Electric		
Power supply	—				100 to 240V AC		
External dimensions (mm)	—	ø120 × 48.2(H)	ø110 × 50.7(H)	ø120 × 50.6(H)	Turret: 164(W)×65(H)×137(D) Console box: 108(W)×72(H)×193(D) Cable length: 3m		
Applicable model	Required for **MF-U D**						

* To denote your AC line voltage add the following suffixes to the order No.:
(e.g.: 375-057D); D for CEE, E for BS

Optional accessories

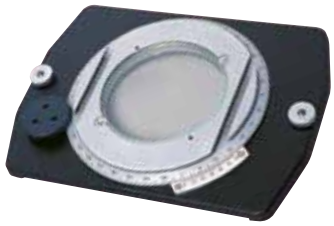

Rotary table with fine feed wheel (A)	
Order No.	**176-305**
External dimensions	280(W)×280(D)×23.7(H)mm Tabletop: ø240mm, 360° rotation, no angle scale
Mass	5.5kg
Effective glass diameter	182mm
Applicable model	Size 1010, 2010 (**MF D / MF-U D**)

Note: The V-block with clamp, swivel center support and holder with clamp can be mounted on the table.

Rotary table with fine feed wheel (B)	
Order No.	**176-306**
External dimensions	342(W)×342(D)×23.2(H)mm Tabletop: ø270mm, 360° rotation, no angle scale
Mass	6.5kg
Effective glass diameter	238mm
Applicable model	Size 2017, 3017, 4020 (**MF D / MF-U D**)

Note: The V-block with clamp, swivel center support and holder with clamp can NOT be mounted on the table.

Rotary table with fine feed wheel (with scale)	
Order No.	**172-198**
External dimensions	240(W)×172(D)×19.7(H)mm T-groove pitch of the tabletop: 120 Tabletop: ø270mm, 360° rotation, minimum angle adjustment: vernier 2'
Mass	2.4kg
Effective glass diameter	96mm
Applicable model	**MF D / MF-U D** Note: Size 2010 is used with stage adapter B Sizes 2017, 3017, and 4020 are used with stage adapter

Note: The V-block with Clamp, Swivel Center Support and Holder with Clamp can be mounted on the table.

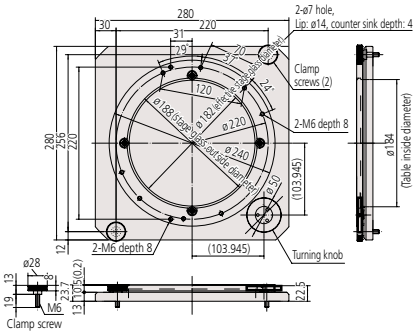

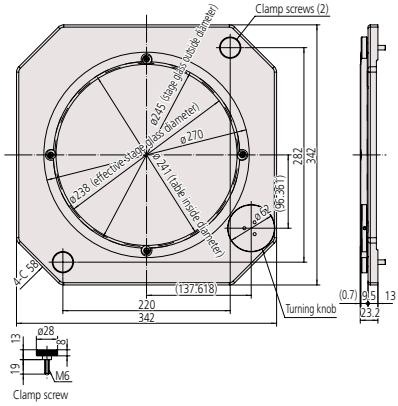

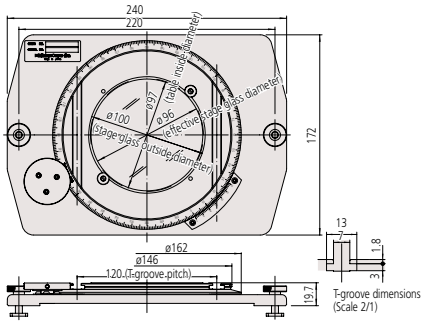

V-block with clamp	
Order No.	**172-378**
	Maximum clamping diameter: 25mm Height from the mounting surface to the center: 38 to 48mm
External dimensions (mm)	117(H)×90(W)×45(D)
Mass	0.8kg
Applicable model	**MF D / MF-U D** Note: Size 2010 is used with stage adapter B. Sizes 2017, 3017, and 4020 are usable with stage adapter

Swivel center support	
Order No.	**172-197**
	± 10° for swivel position Minimum angle index: 1° Suitable for measuring screws or other objects Maximum horizontal clamping size: ø80×140mm Maximum clamping size when inclined 10°: ø65×140mm
Mass	2.5kg
Applicable model	**MF D / MF-U D** Note: Size 2010 is used with stage adapter B. Sizes 2017, 3017, and 4020 are used with stage adapter

Holder with clamp	
Order No.	**176-107**
Maximum clamp length (mm)	35
External dimensions (mm)	62(H)×152(W)×38(D)
Mass	0.4kg
Applicable model	**MF D / MF-U D** Note: Size 2010 is used with stage adapter B. Sizes 2017, 3017, and 4020 are usable with stage adapter

Stage adapter / Stage adapter B	
Order No.	**176-304** (for 2017, 3017, 4020) **B: 176-310** (for 2010)
External dimensions for one piece (mm)	50(W)×340(D)×15(H) Note: Adapter B is 280(D).
Mass	1.5kg / B: 1.2kg
Applicable model	**MF D / MF-U D**

Note: The two pieces are provided as one set.

Polarization unit	
Order No.	**378-092** (For both the bright-field model and the bright-field and dark-field model) Each polarizer/analyzer is provided as a one-piece set.
Applicable model	**MF-U D**

Differential interference contrast unit	
Order No.	**378-080** (for 5X and 10X) **378-079** (for 20X) **378-078** (for 50X and SL20X) **378-076** (for 100X, SL80X, and SL50)
Applicable model	**MF-U D**

Note: Use this with a polarization unit.

Illumination filter		
For halogen illumination for a microscope*	GIF filter	**12AAA645**
	LB80 filter	**12AAA646**
	ND2 filter	**12AAA643**
	ND8 filter	**12AAA644**
For a light source of reflected illumination (for 100 W fiber illumination)	GIF filter	**12AAG806**
	LB80 filter	**12AAG807**

*__MF D__ (for both transmitted illumination and reflected illumination), **MF-U D** (only for transmitted illumination)

C-mount adapter	
Order No.	**970441**
	This standard adapter is used to mount a device such as a digital camera to the TV camera port of a microscope. Note: This is not used when the Vision Unit is mounted.
External dimensions (mm)	ø45×22.5(H)
Applicable model	**MF D / MF-U D**

0.5X TV adapter (including C-mount adapter)	
Order No.	**375-054**
	This standard adapter is used to mount a device such as a digital camera to the TV camera port of a microscope. This adapter enables observation with a wide field of view using a 0.5X minimum relay image. Magnification accuracy: ±0.1%, Image field diameter: 11mm Note: This adapter is included with the Vision Unit as standard.
External dimensions (mm)	ø45×123(H)
Applicable model	**MF D / MF-U D**

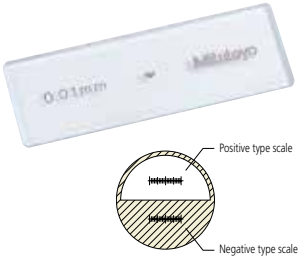

Stage micrometer	
Order No.	**375-056**
Scale length	1mm
Minimum graduation	0.01mm
Scale accuracy (20°C)	1+L(μm). L: length between any two lines (mm)
Scale	Negative type / Positive type
External dimensions (mm)	76(W)×26(D)
Mass	16g
Applicable model	**MF D/MF-U D**

Note: After selling the product, we perform calibration. For details, please contact a sales office near you.

Optional accessories

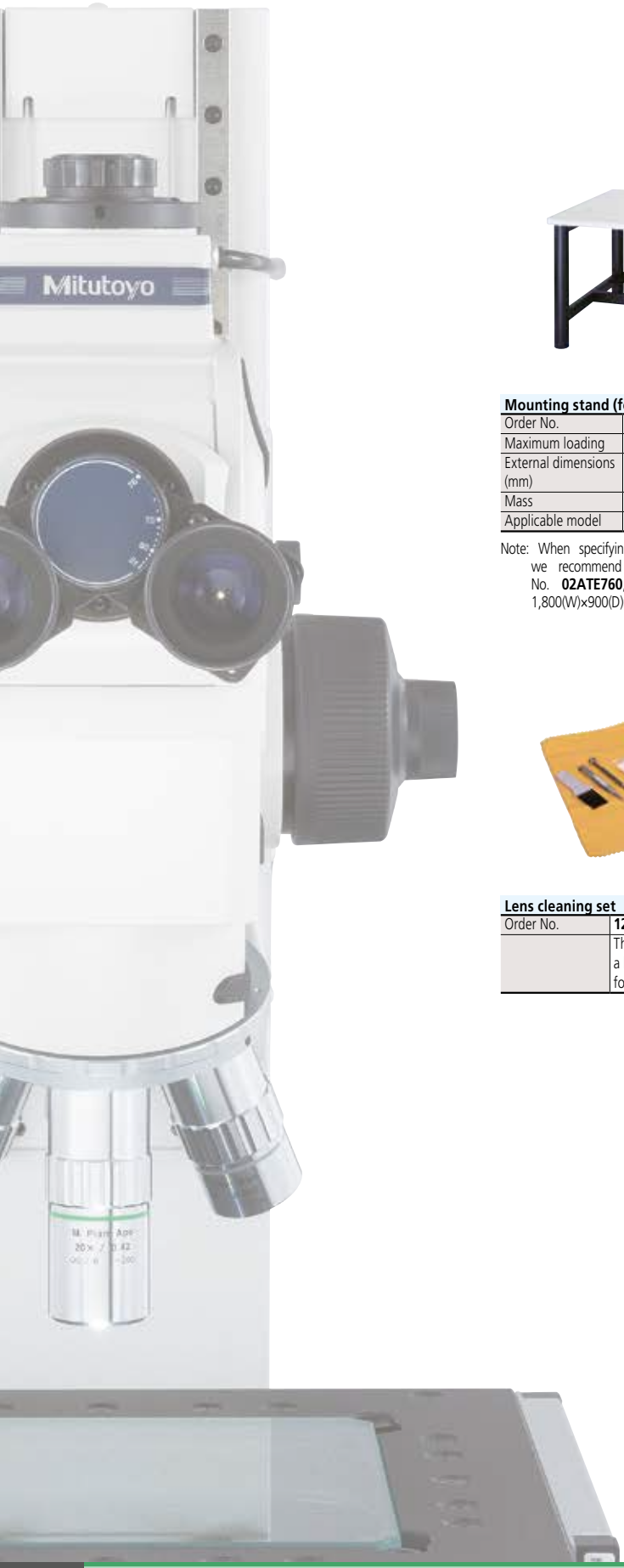

Mounting stand (for microscope)	
Order No.	**176-309**
Maximum loading	300kg
External dimensions (mm)	1200(W)×900(D)×650(H)
Mass	Approximately 50kg
Applicable model	**MF D / MF-U D**

Note: When specifying a microscope with the Vision Unit, we recommend selecting the large mounting stand No. **02ATE760**, which has external dimensions of 1,800(W)×900(D)×740(H).

Vibration-damping stand	
Order No.	**176-308**
Supporting method	Spring pad
Maximum loading	200kg
External dimensions (mm)	750(W)×550(D)×36(H)
Mass	36kg
Applicable model	**MF D / MF-U D**

Lens cleaning set	
Order No.	**12AAA165**
	This exclusive set includes cleaner, cloth, a blower, cotton wads and other items for maintaining eyepieces and objectives.

Optional accessories
Reticles

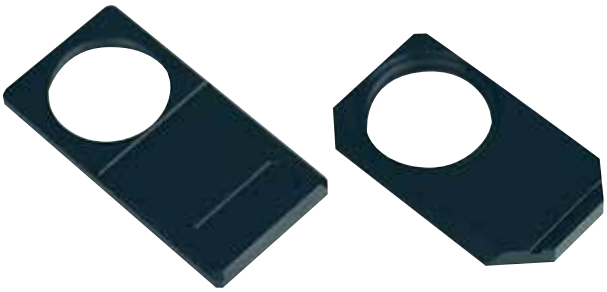

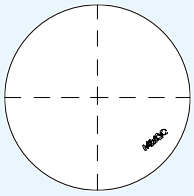

No.12AAG838 (MF D)
No.12AAG878 (MF-U D)
90° chain lines
Chain line pitch: 0.2 to 0.2
Line width: 7μm

No.12AAG836 (MF D)
No.12AAG877 (MF-U D)
90° chain line
Chain line pitch: 0.2 to 0.2
Line width: 5μm

No.12AAG873 (MF D)
No.12AAG876 (MF-U D)
90° chain lines
Chain line pitch: 0.2 to 0.2
Line width: 3μm

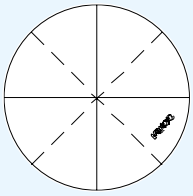

No.12AAG839
(MF C / MF D)
No.12AAG879
(MF-U D)
90° solid lines, 45° chain lines
Chain line pitch: 0.2 to 0.2
Line width: 5μm

For MF D

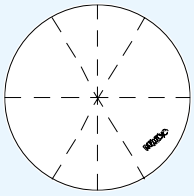

No.12AAG840
(MF C / MF D)
No.12AAG880
(MF-U D)
90° chain lines, 60° chain lines
Chain line pitch: 0.2 to 0.2
Line width: 5μm

For MF-U D

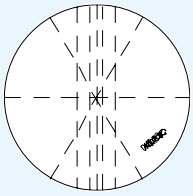

No.12AAG841
(MF C / MF D)
No.12AAG881
(MF-U D)
Zeiss type pattern
Chain line pitch: 0.2 to 0.2
Line width: 5μm

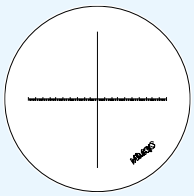

No.12AAG842
(MF D)*1
Cross haired graduation lines
0.1/20mm
Line width: 7μm

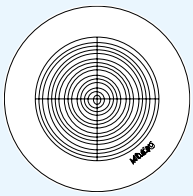

No.12AAG843
(MF D)*1
Concentric circles with
graduation lines
ø1.2 to ø18
Line width: 7μm

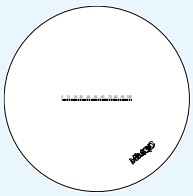

No.12AAG844
(MF D)*1
Graduation lines
0.1/10mm
Line width: 10μm

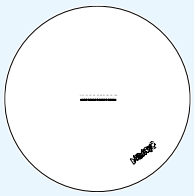

No.12AAG845
(MF D)*1
Graduation lines
0.05/5mm
Line width: 10μm

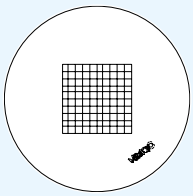

No.12AAG846
(MF D)*1
Grid lines
□ 1mm □ 10mm
Line width: 10μm

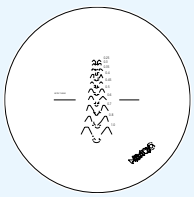

No.12AAG847
(MF D)*2
Metric coarse screw thread
p = 0.25 to 1.0
Line width: 7μm

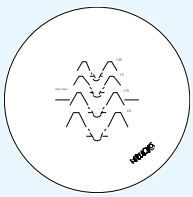

No.12AAG848
(MF D)*2
Metric coarse screw thread
p = 1.25 to 2.0
Line width: 7μm

No.12AAG849
(MF D)*2
Involute gear reference rack
m = 0.1 to 1.0, pressure angle: 14.5°
Line width: 7μm

No.12AAG850
(MF D)*2
Involute gear reference rack
m = 0.1 to 1.0, pressure angle: 20°
Line width: 7μm

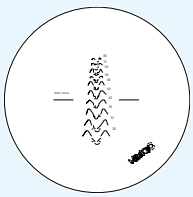

No.12AAG851
(MF D)*2
Unified coarse screw thread
80 to 28
Line width: 7μm

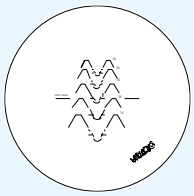

No.12AAG852
(MF D)*2
Unified coarse screw thread
24 to 14
Line width: 7μm

No.12AAG853
(MF D)*2
Unified coarse screw thread
13 to 10
Line width: 7μm

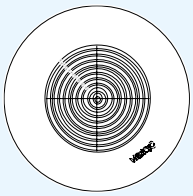

No.12AAG854
(MF D)*2
Concentric circles with cross hairs
0.01" to 0.20"
Line width: 7μm

Reticle for digital protractor eyepiece
(included as standard)

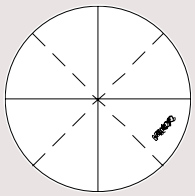

90° solid lines, 45° chain lines,
chain line pitch: 0.2 to 0.2
line width: 7μm

Each reticle includes an attachment board.
*1. Use this with a 10X magnification eyepiece.
*2. This is the comparison chart specific to a 3X ML objective. Use this with a 10X magnification eyepiece.

Coordinate Measuring Machines

Vision Measuring Systems

Form Measurement

Optical Measuring

Sensor Systems

Test Equipment and Seismometers

Digital Scale and DRO Systems

Small Tool Instruments and Data Management

Whatever your challenges are, Mitutoyo supports you from start to finish.

Mitutoyo is not only a manufacturer of top quality measuring products but one that also offers qualified support for the lifetime of the equipment, backed up by comprehensive services that ensure your staff can make the very best use of the investment.

Apart from the basics of calibration and repair, Mitutoyo offers product and metrology training, as well as IT support for the sophisticated software used in modern measuring technology. We can also design, build, test and deliver bespoke measuring solutions and even, if deemed cost-effective, take your critical measurement challenges in-house on a sub-contract basis.

Find additional product literature and our product catalogue

www.mitutoyo.eu

Mitutoyo

Mitutoyo Europe GmbH

Borsigstraße 8-10
41469 Neuss

Tel. +49 (0) 2137-102-0
Fax +49 (0) 2137-102-351

info@mitutoyo.eu
www.mitutoyo.eu